SIGN	DATE	DESCRIPTION	APPROVER
1	01/27`07	The Soldering temperature changed from 245°C to 250°C	Aaron
2	05/05`12	Operating temperature is changed	Runner
3	05/05`12	Lever material is changed	Runner
4	05/05`12	Add the tolerance	Runner

THIS IS CAD DRAWING, DO NOT REVISE MANUALLY!!!

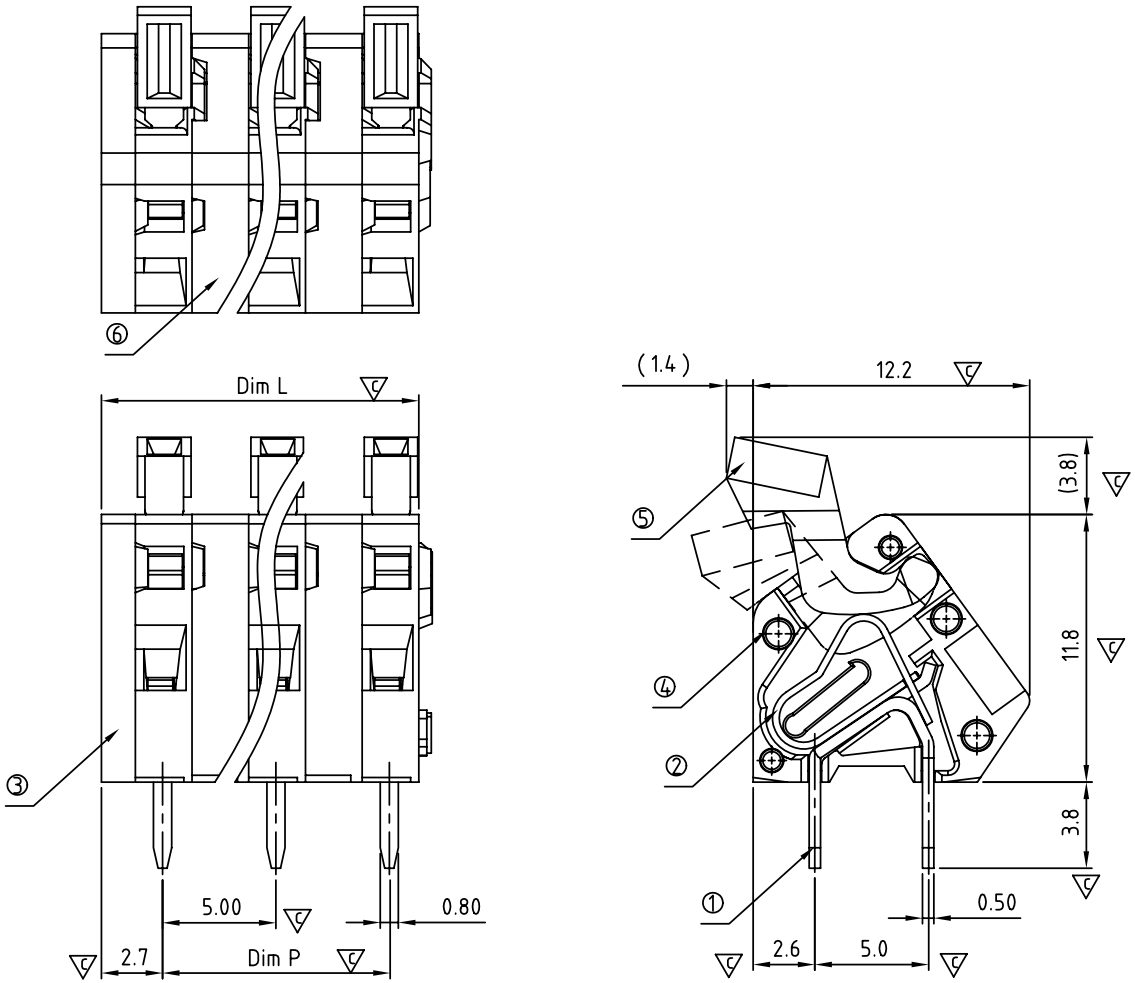

N=Number of poles

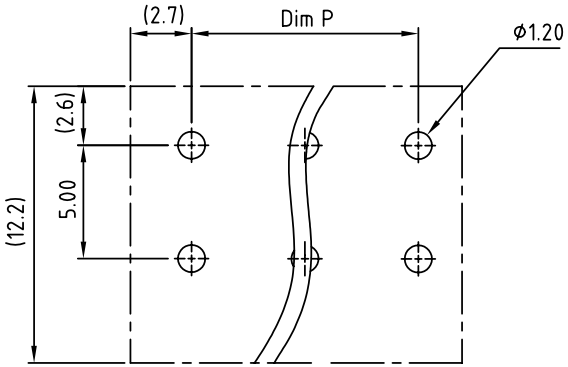

P.C.B LAYOUT

4

DIM		TOL		
		2P-5P	7P-8P	9P-12P
Dim L	(N-1)X5.0+4.04	±0.20	±0.30	±0.40
Dim P	(N-1)×5.0			

Material

- Item ① Solder Pin(Contact pin) : Brass ,Tin plated
- Item ② Spring clamp : Stainless steel
- Item ③ Terminal cover: Thermoplastic (UL94V-0)
- Item ④ Terminal housing: Thermoplastic (UL94V-0)
- 3 Item ⑤ Lever: Thermoplastic (UL94 HB)
- Item ⑥ Pad board: Thermoplastic (UL94V-0)

Electrical cULus

- Voltage rating:150V
- Current rating:4A
- Wire range:
- Solid wire(AWG):22-28
- Stranded wire(AWG):22-28
- Wire strip length:6-7mm
- Withstanding Voltage:1.3KV
- 2 Operating temperature:-40°C to +115°C
- 1 Soldering temperature:250°C±10°C/5 Sec
- Safety approval : cULus
- Critical dimension:

HE xx 00 x 0 xxxx G

- xx: 02 2 POLES; 03 3 POLES; ... ...; 12 12 POLES
- x: 0 Black(RAL9005); 4 Orange(RAL2011/P); 5 Green(RAL6018/T); 6 Blue(RAL5015/A); 8 Grey (RAL7004/P)
- xxxx: 000 0 Standard @ Logo; 000 A Standard ANY Logo; Any special item by customer request, please contact sales department.
- G: RoHS compliant (lead<4%) In copper Alloy

ANYTEK

CUSTOMER COPY

ALL RIGHTS RESERVED. REPRODUCTION OR ISSUE TO THIRD PARTIES IN ANY FORM WHATEVER IS NOT PERMITTED WITHOUT WRITTEN AUTHORITY FROM THE PROPRIETOR. PROPERTY OF ANYTEK TECHNOLOGY CO., LTD

TITLE	HE 5.0 SERIES With lever				
PART NO.	HExx00x0xxxxG			DWG NO.	8HE0201
APPROVED	CHECKED	DESIGNED	DRAWN	CUST NO.	
		Runner 2023.05.05	Marvin 2006.07.03	UNIT: mm / SCALE: NONE / SHEET: 01/01 / REV.: D	

Tolerance	
X.	±0.50
X.X	±0.30
X.XX	±0.10
X°	±1°