THIS DRAWING IS UNPUBLISHED. RELEASED FOR PUBLICATION 20
© COPYRIGHT 20 BY TYCO ELECTRONICS CORPORATION. ALL RIGHTS RESERVED.

LOC	DIST
ES	00

REVISIONS

P	LTR	DESCRIPTION	DATE	DWN	APVD
	A	RELEASED	23NOV09	B.G	A.G

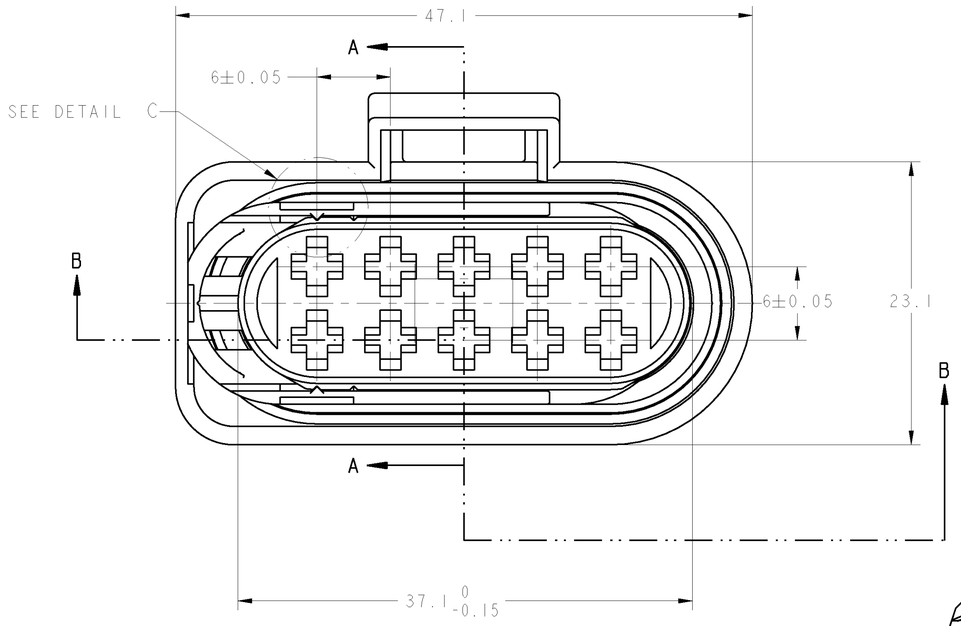

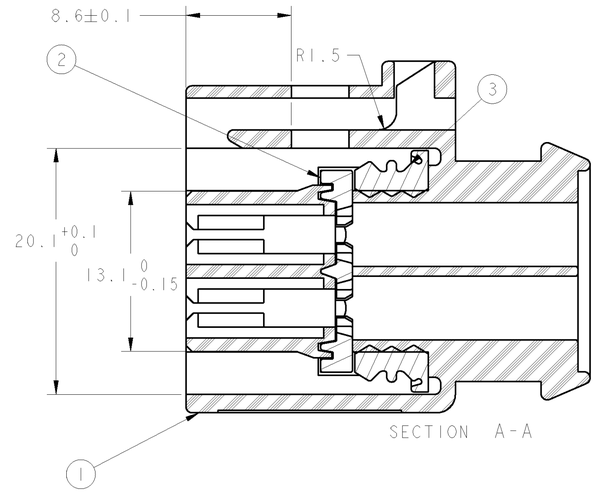

SECTION A-A

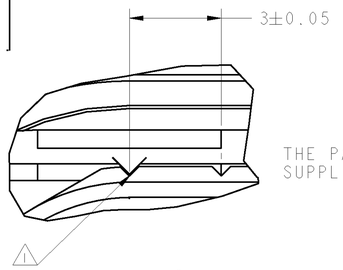

THE PARTS MUST BE SUPPLIED AS SHOWN.

DETAIL C
SCALE 10:1

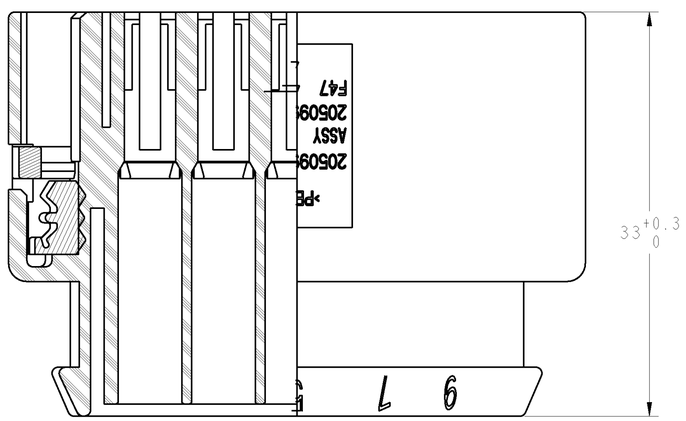

SECTION B-B

NOTES

1. SHOWN AS SUPPLIED:RETAINER IN PRE-LOCKED POSITION.
2. BULK PACKAGED
3. USED WITH TERMINAL 1355047

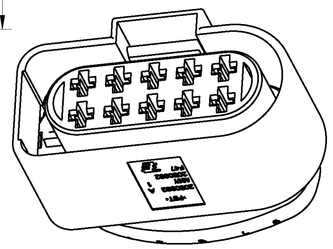

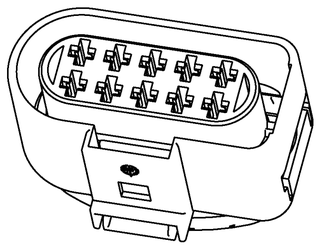

PERSPECTIVE VIEW
SCALE 2:1

-1 AS SHOWN

SEALING	LSR	ORANGE	3
RETAINER	PBT+GF10	VIOLET	2
RECEPTACLE HSG	PBT	BLACK	1
DESCRIPTION	MATERIAL	FINISH	ITEM

THIS DRAWING IS A CONTROLLED DOCUMENT FOR TYCO ELECTRONICS CORPORATION. IT IS SUBJECT TO CHANGE. ALL INQUIRIES TO THE ENGINEERING ORGANIZATION SHOULD BE CONTACTED FOR THE LATEST REVISION.

DIMENSIONS: mm

TOLERANCES UNLESS OTHERWISE SPECIFIED: ACC. TO DIN 16901-130

0 PLC	± -
1 PLC	±0.1
2 PLC	±0.01
3 PLC	±0.001
4 PLC	±0.0001
ANGLES	±

MATERIAL -
FINISH -

DWN	B.GUO	20NOV2009
CHK	A.GUANCO	20NOV2009
APVD	A.GUANCO	23NOV2009

PRODUCT SPEC 108-101024
APPLICATION SPEC
WEIGHT -

Tyco Electronics — Tyco Electronics, SHANGHAI, CHINA

NAME: ASSY, 10P JPT CONNECTOR JUNIOR TIMER

SIZE	CAGE CODE	DRAWING NO	RESTRICTED
A1	00779	C-2050992	-

CUSTOMER DRAWING | SCALE 4:1 | SHEET 1 OF 1 | REV A