Alle Rechte vorbehalten/ *All rights reserved*

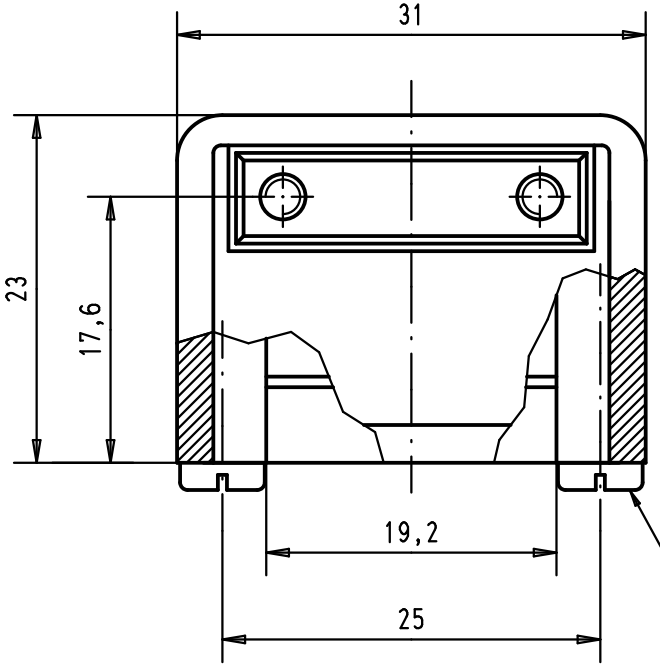

Slotted pan head tapping screws
DIN 7971-ST 2,9x6,5-F
screwing torque=35Ncm +/-5Ncm

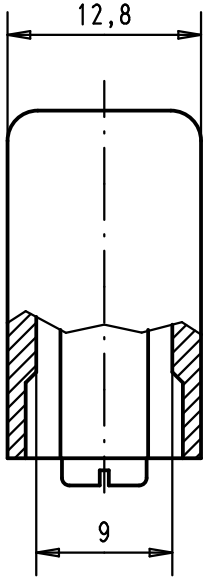

Slotted pan head tapping screws
DIN 7971-ST 2,2x9,5-F
Maximum screwing torque=0,25 mN

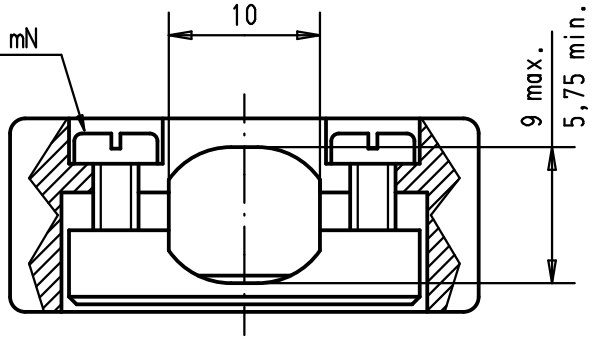

Part number	Material	Mod.	Dat.	Name
09 67 009 0413	Thermoplastic metallized	36260	14-MAR-11	SC
09 67 009 0411	Thermoplastic grey RAL 7032	29760		
		EC03223	25-MAY-11	SD

	Dat.	Name
Detail.	28-MAR-02	CV
Insp.	25-MAY-11	JMDV
Stand.		

All Dim. in mm
Orig. Size DIN A 4

HARTING EURL
F-95972 Paris

D-Sub, Hood 09 poles, for spring or slide locking, top cable entry

Maßstab/ *Scale* 2:1

TB 09 67 009 041x

Sub.

Blatt/ *Page* 1/1