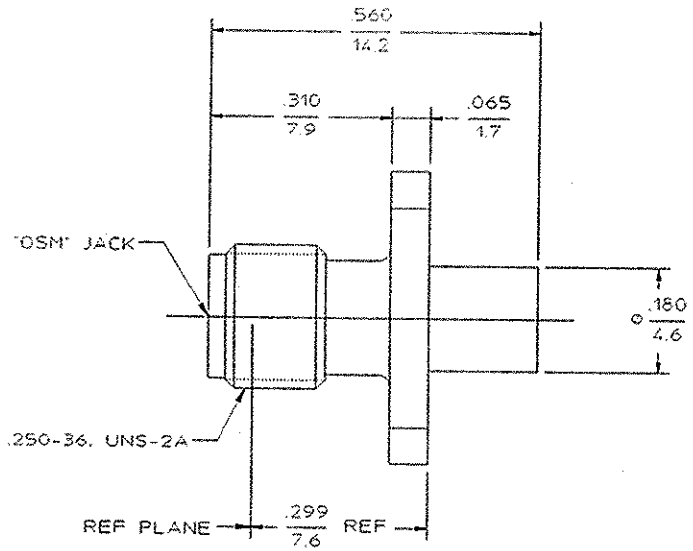

DESIGNED FOR USE WITH	
.141 S.R.	
CABLE ENTRY DIAMETER MINIMUM	
HOUSING	.142
CONTACT	.037

REVISIONS			
REV	DESCRIPTION	DATE	APPROVED
01_0	RELEASED	10/4/96	RAF

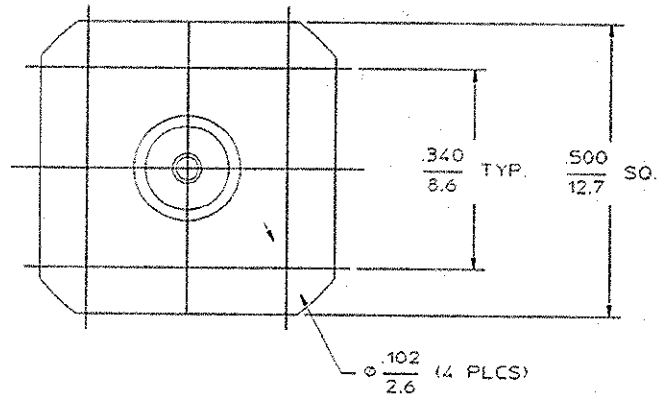

ELECTRICAL	
Nominal Impedance (Ohms)	50
Frequency Range (GHz) DC to 18	
Volt Rating (VRMS MAX)	
@ Sea Level	500
VSWR 1.05 +0.008 (GHz)	
Insertion Loss (dB MAX) .03 × √(GHz)	
RF Leakage (dB MIN) -90 @ 2 to 3 GHz	
Corona, 70,000 Ft (VRMS MIN) 375	
Dielectric Withstanding Voltage	
(VRMS MIN) @ Sea Level	1500
Contact Resistance (Milliohms MAX)	
Center Contact	3.0
Outer Contact	2.0
Cable to Housing	0.5
RF High Potential @ Sea Level	
(VRMS MIN @ 5 MHz)	1,000
I.R.(Megohms MIN)	5,000

MECHANICAL	
Interface Dimensions MIL-STD-348A,	
Fig. 310-2	
Mating Characteristics	
Insertion (MAX Lbs)	2.0
Withdrawal (MIN Oz)	1.0
Force to Engage and	
Disengage (In-Lbs MAX)	2.0
Center Contact Captivation	
Axial (Lbs)	N/A
Radial (In-Oz)	N/A
Cable Retention	
Axial Force (Lbs)	60
Torque (In-Oz)	55
Weight (Grams)	180

.XXX = in

XX.X = mm (REF)

ENVIRONMENTAL
Temperature Rating -65°C TO +165°C
Vibration MIL-STD-202, Method 204, Condition D
Shock MIL-STD-202, Method 213, Condition I
Thermal Shock MIL-STD-202, Method 107, Condition B, Except High Temp +115°C
Moisture Resistance MIL-STD-202, Method 106. No Measurements at At High Humidity. I.R. Shall Be At Least 200 Megohms Within 5 Minutes After Removal From Humidity.
Corrosion - MIL-STD-202, Method 101, Condition B, 5% salt spray

COMPONENT	MATERIAL	FINISH
HOUSING	STAINLESS STEEL PER ASTM-A484 AND ASTM-A582, TYPE 303	GOLD PLATE PER MIL-G-45204
DIELECTRIC	TFE FLUOROCARBON PER ASTM-D-1457	N/A
CENTER CONTACT	BERYLLIUM COPPER PER ASTM-B-196 OR ASTM-B-197, ALLOY C17300, CONDITION H	GOLD PLATE PER MIL-G-45204

UNLESS OTHERWISE SPECIFIED DIMENSIONS ARE IN INCHES

FRAC. ± 1/64 DEC. ±.005 ANGLES ± 1°

DRAWN BY RDP DATE 8/27/96

CHECKED BY

APPD BY RAF 10/4/96

These drawings and specifications are the property of M/A COM Interconnect Div. and shall not be reproduced or copied or used in whole or in part as the basis for the manufacture or sale of items) without written permission.

USE ASS'Y PROCEDURE

NO AP 20-554

M/A-COM an AMP company

M/A-COM, Inc. Waltham, MA 02254

TITLE "OSM" FLANGE MOUNT CABLE JACK DIRECT SOLDER ATTACHMENT M39012/82B3002 CAT B

SIZE	CODE IDENT NO.		REV
B	26805	2006-8002-90	01_0

SCALE 5:1 SHEET 1 OF 1

Tyco Customer PN 1051088

Sheet 1 of 1 RevO