THIS DRAWING IS UNPUBLISHED. RELEASED FOR PUBLICATION - ,- .
© COPYRIGHT - By - ALL RIGHTS RESERVED.

LOC	DIST
AD	00

REVISIONS

P	LTR	DESCRIPTION	DATE	DWN	APVD
	F	REVISED PER ECO-14-000255	15JUL2014	NK	MM

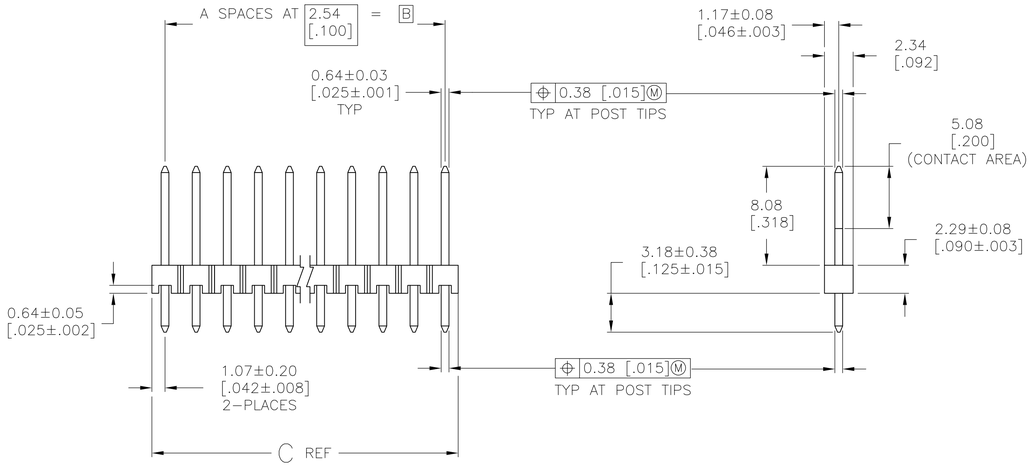

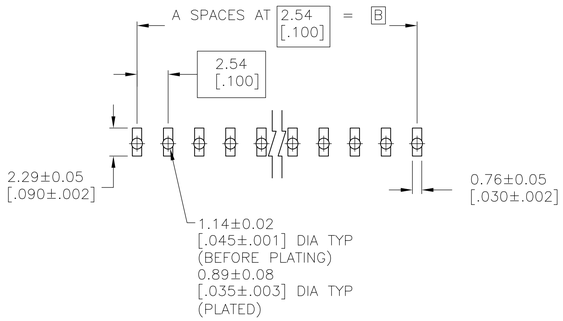

RECOMMENDED PC BOARD MOUNTING DIMENSIONS
FOR .063 [1.60] THICK PC BOARD AND
.012 [.305] STENCIL THICK.

5	101.19 [3.984]	99.06 [3.900]	39	40	9-146275-0
5	98.65 [3.884]	96.52 [3.800]	38	39	7 8-146275-9
5	96.11 [3.784]	93.98 [3.700]	37	38	7 8-146275-8
5	93.57 [3.684]	91.44 [3.600]	36	37	7 8-146275-7
5	91.03 [3.584]	88.90 [3.500]	35	36	7 8-146275-6
5	88.49 [3.484]	86.36 [3.400]	34	35	7 8-146275-5
5	85.95 [3.384]	83.82 [3.300]	33	34	7 8-146275-4
5	83.41 [3.284]	81.28 [3.200]	32	33	7 8-146275-3
5	80.87 [3.184]	78.74 [3.100]	31	32	7 8-146275-2
5	78.33 [3.084]	76.20 [3.000]	30	31	7 8-146275-1
5	75.79 [2.984]	73.66 [2.900]	29	30	7 8-146275-0
5	73.25 [2.884]	71.12 [2.800]	28	29	7 7-146275-9
5	70.71 [2.784]	68.58 [2.700]	27	28	7 7-146275-8
5	68.17 [2.684]	66.04 [2.600]	26	27	7 7-146275-7
5	65.63 [2.584]	63.5 [2.500]	25	26	7 7-146275-6
5	63.09 [2.484]	60.96 [2.400]	24	25	7 7-146275-5
5	60.55 [2.384]	58.42 [2.300]	23	24	7 7-146275-4
5	58.01 [2.284]	55.88 [2.200]	22	23	7 7-146275-3
5	55.47 [2.184]	53.34 [2.100]	21	22	7 7-146275-2
5	52.93 [2.084]	50.80 [2.000]	20	21	7 7-146275-1
5	50.39 [1.984]	48.26 [1.900]	19	20	7 7-146275-0
5	47.85 [1.884]	45.72 [1.800]	18	19	7 6-146275-9
5	45.31 [1.784]	43.18 [1.700]	17	18	7 6-146275-8
5	42.77 [1.684]	40.64 [1.600]	16	17	7 6-146275-7
5	40.23 [1.584]	38.10 [1.500]	15	16	7 6-146275-6
5	37.69 [1.484]	35.56 [1.400]	14	15	7 6-146275-5
5	35.15 [1.384]	33.02 [1.300]	13	14	7 6-146275-4
5	32.61 [1.284]	30.48 [1.200]	12	13	7 6-146275-3
5	30.07 [1.184]	27.94 [1.100]	11	12	7 6-146275-2
5	27.53 [1.084]	25.40 [1.000]	10	11	7 6-146275-1
5	24.99 [.984]	22.86 [.900]	9	10	7 6-146275-0
5	22.45 [.884]	20.32 [.800]	8	9	7 5-146275-9
5	19.91 [.784]	17.78 [.700]	7	8	7 5-146275-8
5	17.37 [.684]	15.24 [.600]	6	7	7 5-146275-7
5	14.83 [.584]	12.70 [.500]	5	6	7 5-146275-6
5	12.29 [.484]	10.16 [.400]	4	5	5-146275-5
5	9.75 [.384]	7.62 [.300]	3	4	7 5-146275-4
5	7.21 [.284]	5.08 [.200]	2	3	7 5-146275-3
5	4.67 [.184]	2.54 [.100]	1	2	7 5-146275-2
5	2.13 [.084]	- [-]	0	1	7 5-146275-1
PLATING	C	B	A	NO. OF POSITIONS	PART NUMBER

	3	101.19 [3.984]	99.06 [3.900]	39	40	4-146275-0
	3	98.65 [3.884]	96.52 [3.800]	38	39	6 3-146275-9
	3	96.11 [3.784]	93.98 [3.700]	37	38	6 3-146275-8
	3	93.57 [3.684]	91.44 [3.600]	36	37	6 3-146275-7
	3	91.03 [3.584]	88.90 [3.500]	35	36	6 3-146275-6
	3	88.49 [3.484]	86.36 [3.400]	34	35	6 3-146275-5
	3	85.95 [3.384]	83.82 [3.300]	33	34	6 3-146275-4
	3	83.41 [3.284]	81.28 [3.200]	32	33	6 3-146275-3
	3	80.87 [3.184]	78.74 [3.100]	31	32	6 3-146275-2
	3	78.33 [3.084]	76.20 [3.000]	30	31	6 3-146275-1
	3	75.79 [2.984]	73.66 [2.900]	29	30	6 3-146275-0
	3	73.25 [2.884]	71.12 [2.800]	28	29	6 2-146275-9
	3	70.71 [2.784]	68.58 [2.700]	27	28	6 2-146275-8
	3	68.17 [2.684]	66.04 [2.600]	26	27	6 2-146275-7
	3	65.63 [2.584]	63.5 [2.500]	25	26	6 2-146275-6
	3	63.09 [2.484]	60.96 [2.400]	24	25	6 2-146275-5
	3	60.55 [2.384]	58.42 [2.300]	23	24	6 2-146275-4
	3	58.01 [2.284]	55.88 [2.200]	22	23	6 2-146275-3
	3	55.47 [2.184]	53.34 [2.100]	21	22	6 2-146275-2
	3	52.93 [2.084]	50.80 [2.000]	20	21	6 2-146275-1
	3	50.39 [1.984]	48.26 [1.900]	19	20	6 2-146275-0
	3	47.85 [1.884]	45.72 [1.800]	18	19	6 1-146275-9
	3	45.31 [1.784]	43.18 [1.700]	17	18	6 1-146275-8
	3	42.77 [1.684]	40.64 [1.600]	16	17	6 1-146275-7
	3	40.23 [1.584]	38.10 [1.500]	15	16	6 1-146275-6
	3	37.69 [1.484]	35.56 [1.400]	14	15	6 1-146275-5
	3	35.15 [1.384]	33.02 [1.300]	13	14	6 1-146275-4
	3	32.61 [1.284]	30.48 [1.200]	12	13	6 1-146275-3
	3	30.07 [1.184]	27.94 [1.100]	11	12	6 1-146275-2
	3	27.53 [1.084]	25.40 [1.000]	10	11	6 1-146275-1
	3	24.99 [.984]	22.86 [.900]	9	10	6 1-146275-0
	3	22.45 [.884]	20.32 [.800]	8	9	6 146275-9
	3	19.91 [.784]	17.78 [.700]	7	8	6 146275-8
	3	17.37 [.684]	15.24 [.600]	6	7	6 146275-7
	3	14.83 [.584]	12.70 [.500]	5	6	6 146275-6
SUPERCEDED BY 5-146275-5	3	12.29 [.484]	10.16 [.400]	4	5	6 146275-5
	3	9.75 [.384]	7.62 [.300]	3	4	6 146275-4
	3	7.21 [.284]	5.08 [.200]	2	3	6 146275-3
	3	4.67 [.184]	2.54 [.100]	1	2	6 146275-2
	3	2.13 [.084]	- [-]	0	1	6 146275-1
	PLATING	C	B	A	NO. OF POSITIONS	PART NUMBER

1 ASSEMBLY MAY BE BROKEN TO THE DESIRED NUMBER OF POSITIONS

2 TRUE POSITION TOLERANCE OF THE POST TIPS APPLIES WHEN THE HEADERS ARE HELD FLAT AGAINST THE PRINTED CIRCUIT BOARD

3 0.000127 [.000005] GOLD IN CONTACT AREA, 0.00254-0.00504 [.000100-.000200] MATTE TIN-LEAD ON SOLDER TAIL, ALL OVER 0.00127 [.000050] NICKEL.

4 MATERIAL: HOUSING - LCP, COLOR: BLACK.
POSTS - COPPER ALLOY

5 0.000127 [.000005] GOLD IN CONTACT AREA, 0.00254-0.00504 [.000100-.000200] MATTE TIN ON SOLDER TAIL, ALL OVER 0.00127 [.000050] NICKEL.

6 OBSOLETE PARTS: OBSOLETE CIS STREAMLINING PER D.RENAUD/D.SINISI

7 OBSOLETE

THIS DRAWING IS A CONTROLLED DOCUMENT.

DIMENSIONS: mm [INCHES]

TOLERANCES UNLESS OTHERWISE SPECIFIED:
0 PLC ± -
1 PLC ± -
2 PLC ± 0.51 [.02]
3 PLC ± 0.127 [.005]
4 PLC ± 0.0127 [.0005]
ANGLES ± -

MATERIAL 4

FINISH SEE TABLE

DWN T. HOFFMAN 6/12/95
CHK G. DUBNICZKI 6/29/95
APVD G. DUBNICZKI 6/29/95

PRODUCT SPEC -
APPLICATION SPEC -
WEIGHT -

CUSTOMER DRAWING

TE Connectivity

NAME HEADER ASSEMBLY, MOD II, BREAKWAY, SINGLE ROW, HIGH TEMPERATURE, VERTICAL W/.025 SQ POSTS, .100 ℄

SIZE	CAGE CODE	DRAWING NO	RESTRICTED TO
A1	00779	C-146275	-

SCALE 4:1 SHEET 1 OF 1 REV F

4805 (3/11)