| REV. | ECN NO. | DATE | SIGN | DESCRIPTION |
|---|---|---|---|---|
| | | | | |
| | | | | |

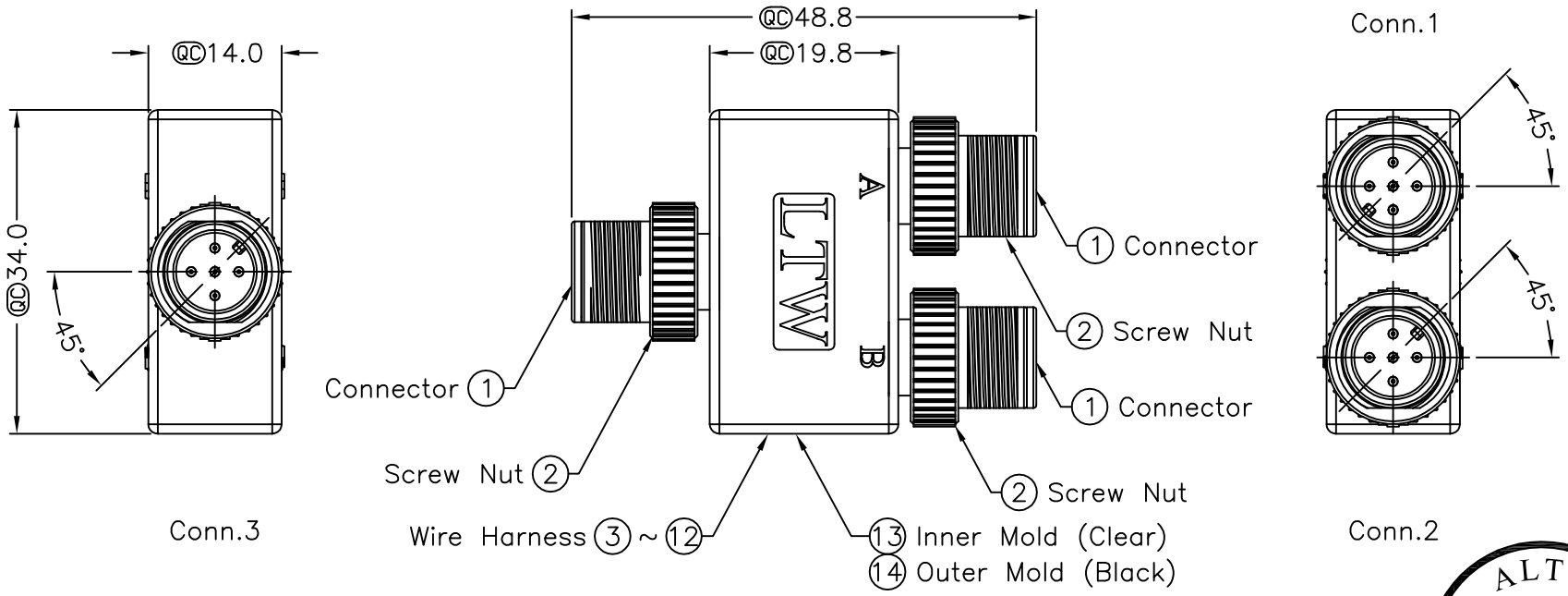


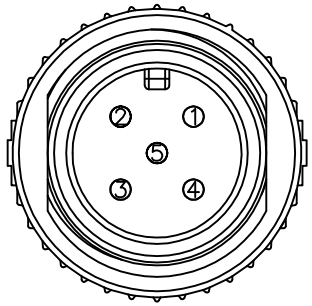


Pin Assignments
Front View

| Conn.1 | Wire Color | Conn.2 | Conn.3 |
|---|---|---|---|
| 5 | Green | 5 | 5 |
| 4 | Black | 4 | 4 |
| 3 | Blue | 3 | 3 |
| 2 | White | 2 | 2 |
| 1 | Brown | 1 | 1 |

Pin Out

ALTW CONFIDENTIAL
2007.05.17
R&D DEPT.

ALTW DCC. DEPT. CONFIDENTIAL
2007.06.01
ISSUED

Notes:
* QC Important Dimension.
* Waterproof Rate: IP68
* Housing: Black, Polyurethane
* Male Pin: Copper Alloy, Gold Plated
* Nut: Zinc, Nickel Plated
* Wire Harness: UL1007 22 AWG

| | | | | | |
|---|---|---|---|---|---|
| UNIT:mm | TITLE: Y Adaptor M12 5 Pin | Amphenol LTW 安費諾亮泰企業股份有限公司 | ITEM NO: SS-050505-MMM-YS001 | DRAWN BY: Jason Manas | DATE: 2007/05/17 |
| TOLERANCE: ±0.5 mm | SCALE: Free / SHEET: 1 OF 1 | | DWG NO: SS-050505-MMM-YS001 | CHECKED BY: Alan MJ Sundo | DATE: 2007/05/17 |
| | REV. A / SIZE A4 / QC :Inspection Item | | CUSTOMER: ALTW | APPROVED BY: Win | DATE: 2007/05/17 |

THIS DOCUMENT IS SUBJECT TO CHANGE WITHOUT NOTICE. IT IS CONFIDENTIAL AND A PROPERTY OF Amphenol LTW. DISCLOSURE TO THIRD PARTY HAS TO BE AUTHORIZED BY Amphenol LTW.