THIS DRAWING IS UNPUBLISHED. RELEASED FOR PUBLICATION 2012
© COPYRIGHT 2012 Tyco Electronics AMP GmbH ALL RIGHTS RESERVED.

FLR-/FLK-WIRE
FLR-/FLK-Leitung

SINGLE WIRE SEAL
Einzeldichtungssystem

REVISIONS					
P	LTR	DESCRIPTION	DATE	DWN	APVD
	A6	Drawing updated.	02SEP2014	Kirs	Merz
	A8	Obsolete PN's removed from Table	28AUG2015	Abr	Merz
	A9	PN 2-968050-1 added. ECR-16-013095	13SEP2016	ABR	MERZ
	A10	PN 2-968050-2 added. ECR-18-004274	12DEC2018	FRAN	MERZ

NOTES
Bemerkungen

1. CONTACT AREA PRE SILVER MIN. 3µm
   OTHER AREA PRE SILVER MIN. 1µm
   SPRING BLANK
   Kontaktzone vorversilbert min. 3µm
   uebriger Bereich vorversilbert min. 1µm
   Ueberfeder blank
2. PRE TIN MIN. 1µm
   SPRING BLANK
   Vorverzinnt min. 1µm
   Ueberfeder blank

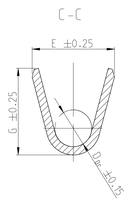

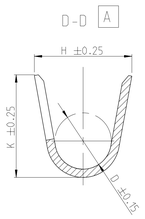

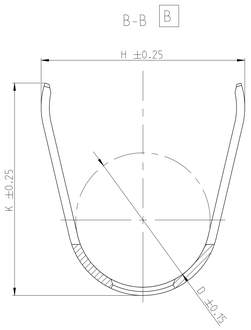

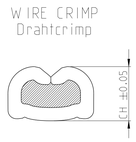

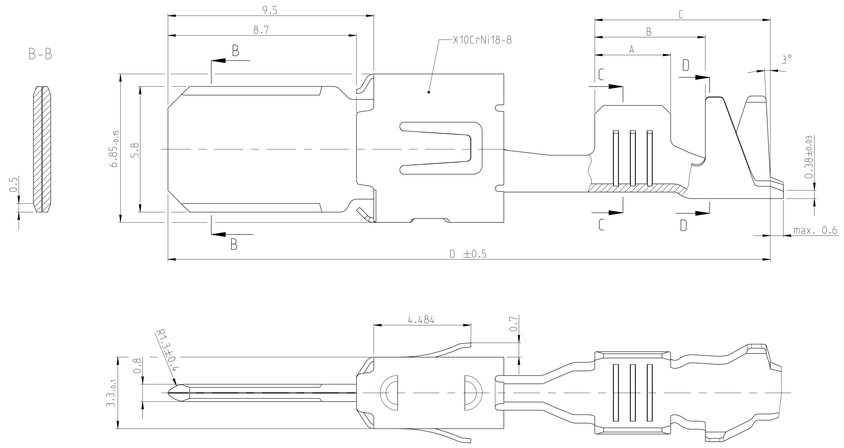

DESIGN 1
Ausfuehrung 1

DESIGN 2
Ausfuehrung 2

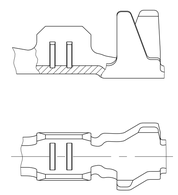

DESIGN 3
Ausfuehrung 3

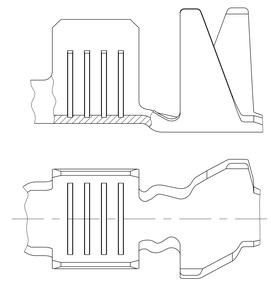

DESIGN 4
Ausfuehrung 4

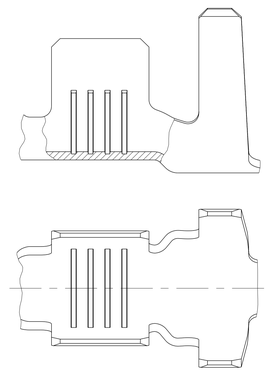

DESIGN 5
Ausfuehrung 5

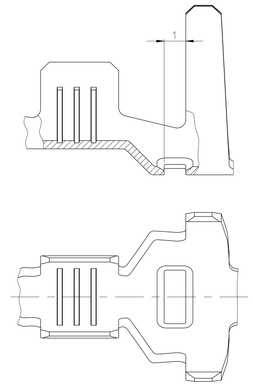

DESIGN 6
Ausfuehrung 6

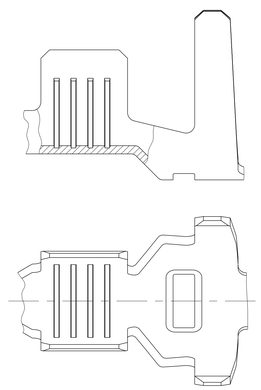

DESIGN 7
Ausfuehrung 7

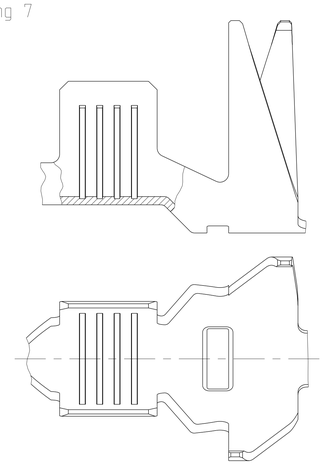

							SEE / siehe SECTION A-A Schnitt A-A	SEE / siehe SECTION B-B Schnitt B-B	SEE / siehe WIRE CRIMP Drahtcrimp					
SINGLE WIRE SEAL / Einzeldichtungssystem	2-2112966-2	A	7	CuFe2	1	6.0 AWG 10	E = 5.3 G = 5.7 D_{Dr} = 2.9	B H = 9.4 K = 9.8 D = 6.2	6.0 mm² = 2.35 AWG 10 = 2.30	1855636-6	4.5	7.8	11.0	29.3
	2-962919-2	E	6	CuFe2	1	4.0	E = 4.6 G = 4.8 D_{Dr} = 2.3	A H = 7.8 K = 7.8 D = 5.5	4.0 mm² = 2.34	2-878567-2	4.0	7.1	9.1	28.3
	1-962919-2	D		CuSn4	1					539757-2				
	1-962919-1	D			2									
	2-962918-2	E	5	CuFe2	1	>1.0 - 2.5	E = 3.8 G = 4.0 D_{Dr} = 1.7	A H = 7.8 K = 7.8 D = 5.5	2.5 mm² = 1.97 2.0 mm² = 1.83 1.5 mm² = 1.69	2-878566-2	3.6	6.7	8.7	28.3
	2-962918-1	E			2									
	1-962918-2	D		CuSn4	1					539757-2				
	1-962918-1	D			2									
	2-962917-1	E	5	CuFe2	2	0.5 - 1.0	E = 2.8 G = 3.0 D_{Dr} = 1.1	A H = 7.8 K = 7.8 D = 5.5	1.0 mm² = 1.56 0.75 mm² = 1.47 0.5 mm² = 1.38	2-878565-2	3.0	6.1	8.1	28.3
	1-962917-2	D		CuSn4	1					539757-2				
	1-962917-1	D			2									
FLK-WIRE / FLK-Leitung	2-968050-1	A	4	CuFe2	2	6.0 4.0	E = 5.3 G = 5.6 D_{Dr} = 2.9	A H = 7.3 K = 7.6 D = 4.6	6.0 mm² = 2.55 4.0 mm² = 2.17	2-878968-2	4.5	6.8	9.1	28.8
	1-968050-1	A		CuSn4	2									
	2-962846-1	D	3	CuFe2	2	4.0	E = 4.6 G = 4.8 D_{Dr} = 2.4	A H = 6.7 K = 7.0 D = 4.0	4.0 mm² = 2.33	2-878564-2	4.0	6.0	10.8	30.5
	1-962846-2	C		CuSn4	1					539759-2				
	1-962846-1	C			2									
	1-962845-2	D	1	CuSn4	1	>1.0 - 2.5	E = 3.8 G = 4.0 D_{Dr} = 1.7	H = 5.7 K = 5.9 D = 3.2	2.5 mm² = 1.97 2.0 mm² = 1.83 1.5 mm² = 1.69	2-878563-2 539759-2	3.6	5.2	9.0	28.7
	1-962845-1	D			2									
FLR-WIRE / FLR-Leitung	2-968050-2	A	4	CuFe2	1	6.0	E = 5.3 G = 5.6 D_{Dr} = 2.9	A H = 7.3 K = 7.6 D = 4.6	6.0 mm² = 2.35	2836646	4.5	6.8	9.1	28.8
	2-963736-2	C	3	CuFe2	1	4.0	E = 4.6 G = 4.8 D_{Dr} = 2.3	A H = 5.5 K = 5.7 D = 3.2	4.0 mm² = 2.33	2-878562-2	4.0	5.9	9.3	29.0
	2-963736-1	C			2									
	1-963736-2	B		CuSn4	1					-				
	1-963736-1	B			2									
	2-963735-2	C	1	CuFe2	1	>1.0 - 2.5	E = 3.8 G = 4.0 D_{Dr} = 1.7	A H = 4.5 K = 4.7 D = 2.6	2.5 mm² = 1.97 2.0 mm² = 1.83 1.5 mm² = 1.69	2-878561-2	3.5	5.1	8.1	27.8
	2-963735-1	C			2									
	1-963735-2	B		CuSn4	1					-				
	1-963735-1	B			2									
	2-963734-2	C	1	CuFe2	1	0.5 - 1.0	E = 2.8 G = 3.0 D_{Dr} = 1.1	A H = 3.3 K = 3.5 D = 1.8	1.0 mm² = 1.56 0.75 mm² = 1.47 0.5 mm² = 1.38	2-878654-2	3.0	4.6	6.8	26.5
	2-963734-1	C			2									
	1-963734-2	B		CuSn4	1					539759-2				
	1-963734-1	B			2									
	2-965984-1	A	2	CuFe2	2	0.2 - 0.5	E = 2.2 G = 2.2 D_{Dr} = 0.8	A H = 3.1 K = 3.1 D = 1.4	-	-	2.5	3.7	5.7	26.5
	1-965984-1	B		CuSn4	2									
	TE ORDER-NO. STRIP FORM TE Bestellnr. Bandware	REV.	DESIGN Ausfuehrung	MATERIAL Werkstoff	SURFACE Oberflaeche	DGB mm²	WIRE CRIMP Drahtcrimp	INSUL. CRIMP Isolationscrimp	WIRE CRIMP HEIGHT CH Drahtcrimphoehe CH	APPLICATION TOOL (MQC APPLICATOR HD) Anschlagwerkzeug	A	B	C	D
							CRIMP DIMENSIONS mm Crimpabmessungen mm			EXTRACTION TOOL Ausdrueckwerkzeug No. 726548-1				

A10

THIS DRAWING IS A CONTROLLED DOCUMENT.	DWN T.Meierhoefer 31JUL2001 CHK T.Meierhoefer 31JUL2001 APVD -	TE Connectivity	
DIMENSIONS: mm	TOLERANCES UNLESS OTHERWISE SPECIFIED: 1 PLC ±0.2 2 PLC ±0.1 3 PLC ±0.05 4 PLC ±0.025 ANGLES ±4°	PRODUCT SPEC 108-18064 APPLICATION SPEC 114-18052 WEIGHT -	NAME TAB 5.8 x 0.8 Flachstecker 5.8 x 0.8
MATERIAL - -	FINISH - -	Customer Drawing	SIZE A0 CAGE CODE 00779 DRAWING NO C-1241895 RESTRICTED TO - SCALE 10:1 SHEET 1 OF 1 REV A10