SIGN	DATE	DESCRIPTION	APPROVER
1	08/13'12	structure design is changed	Dacheng
2	08/25'12	Changed from 250°c±10°/5 Sec to 260°C±5°C/5 Sec	Dacheng

THIS IS CAD DRAWING, DO NOT REVISE MANUALLY!!!

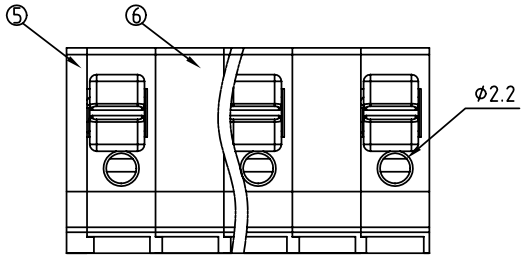

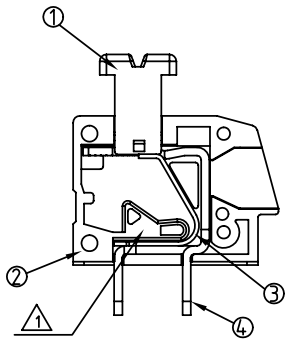

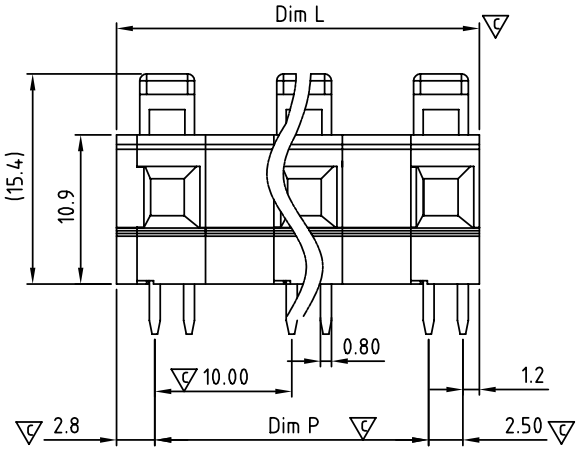

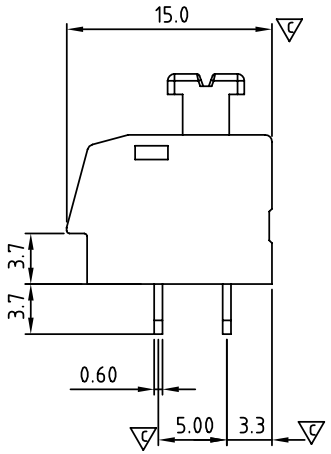

Material:

- Item ① Terminal lever: Thermoplastic (UL94V-0)
- Item ② Terminal housing: Thermoplastic (UL94V-0)
- Item ③ Spring clamp: Stainless steel
- Item ④ Solder pin: Brass. Tin plated
- Item ⑤ Terminal cover: Thermoplastic (UL94V-0)
- Item ⑥ Terminal pad board : Thermoplastic (UL94V-0)

Electrical:	cULus
Voltage rating:	300 V
Current rating:	11 A
Wire range:	
Solid wire(AWG):	12-20
Stranded wire(AWG):	12-20
Wire strip length:	10-11 mm
Withstanding Voltage:	1.6KV
Operating temperature:	-40°C to +115°C
2 Soldering temperature:	260°C ±5°C/5 Sec
Safety Approval:	
Critical dimension:	▽c

H6 xx 2 0 x 0 xxxx G

No. OF POLES
02: 2 POLES
:
:
12: 12 POLES

COLOR
0: BLACK
5: GREEN (RAL 6018/T)
6: BLUE
8: GREY (RAL 7004/P)

G: RoHs compliant (lead<4%) In copper Alloy

1000: "@" Logo (Standard)
100A: "ANYTEK" Mark

Any special item by customer requst. please contact sales department.

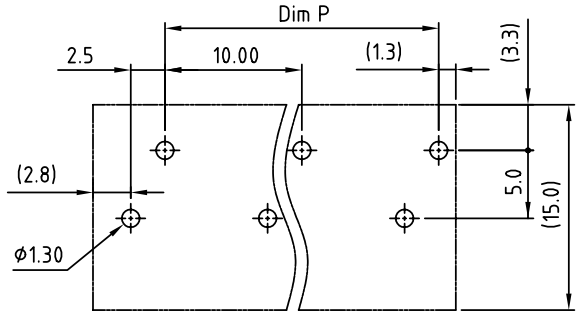

PCB Layout

N = Number of poles
Dim L=(N-1)x10.0+6.5
Dim P=(N-1)x10.0

	Dim L	Dim P
2-6p	±0.25	
7-12p	±0.40	

ANYTEK

CUSTOMER COPY

ALL RIGHTS RESERVED. REPRODUCTION OR ISSUE TO THIRD PARTIES IN ANY FORM WHATEVER IS NOT PERMITTED WITHOUT WRITTEN AUTHORITY FROM THE PROPRIETOR. PROPERTY OF ANYTEK TECHNOLOGY CO., LTD

TITLE	H6 10.0mm Series (Square hole)				
PART NO.	H6xx20x0xxxxG			DWG NO.	8H60305
APPROVED	CHECKED	DESIGNED	DRAWN	CUST NO.	
		Dacheng 2012.08.25	Dacheng 2012.08.25	UNIT: mm / SCALE: NONE / SHEET: 01/01	REV.: D

Tolerance	
X.	±0.50
X.X	±0.30
X.XX	±0.10
X°	±1°