© – TE Connectivity. All Rights Reserved.

REVISIONS					
P	LTR	DESCRIPTION	DATE	DWN	APVD
	AF	REVISED PER ECO-20-001327	04JUN2020	SB	JO

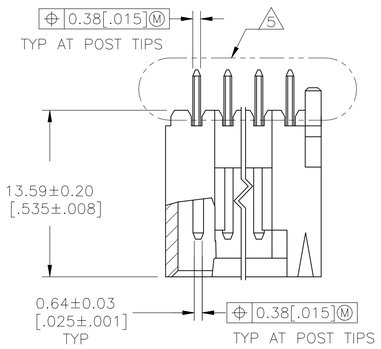

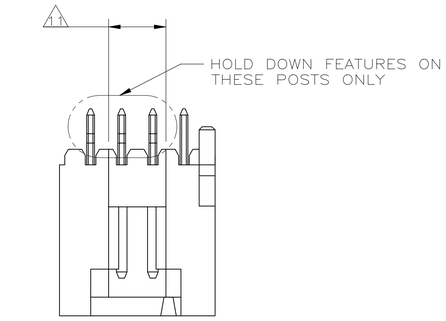

HOLD DOWN CONFIGURATION FOR
4 POSITION ASSEMBLY ONLY

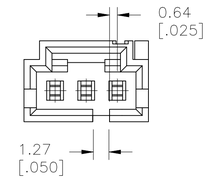

DETAIL
FOR 3 POSN ONLY

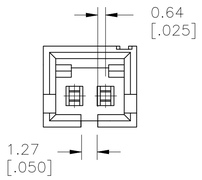

DETAIL
FOR 2 POSN ONLY

1. 0.00254–0.00508 [.000100–.000200] BRIGHT TIN–LEAD OVER 0.00127 [.000050] NICKEL.
2. POINT OF MEASUREMENT FOR PLATING THICKNESS.
3. THESE DIMENSIONS APPLY WHERE THE POST INTERSECTS THE HOUSING.
4. ON ASSEMBLIES WITH FOUR OR MORE POSITIONS, TWO POLARIZATION SLOTS.
5. SELECT POST TAILS FORMED TO PROVIDE CONNECTOR HOLD DOWN UNTIL SOLDERED.CONFIGURATION ACCEPTS 0.69–2.03 [.027–.080] THICK PRINTED CIRCUIT BOARD. (SEE DETAIL Z).
6. MATERIAL: HOUSING– LCP, COLOR–BLACK. POSTS– BRASS.
7. 0.00254–0.00508 [.000100–.000200] BRIGHT TIN OVER 0.00127 [.000050] NICKEL.
8. HIGH TEMPERATURE CONFIGURATION.
9. 0.00254–0.00508 [.000100–.000200] MATTE TIN OVER 0.00127 [.000050] NICKEL.
10. OBSOLETE PARTS: OBSOLETE CIS STREAMLINING PER D.RENAUD/D.SINISI.
11. 0.25 [.010] RECESS PERMISSIBLE IN THIS AREA FOR MOLD SHUT OFF

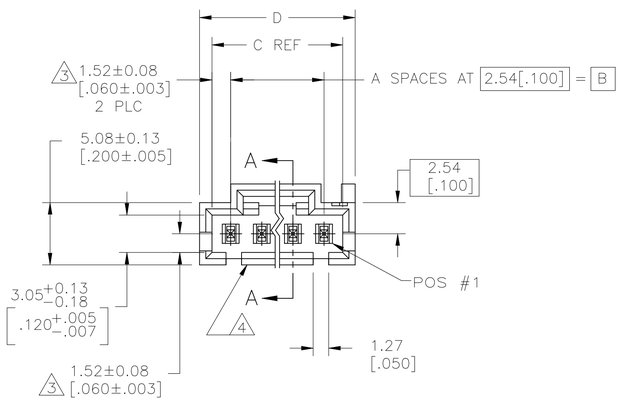

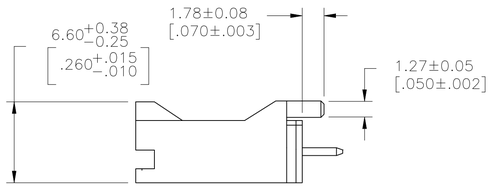

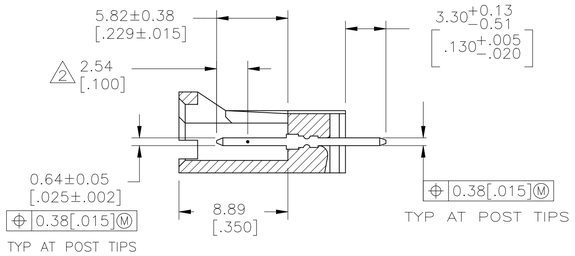

SECTION A–A

	REMARKS	PLATING	D	C	B	A	NO OF POSN	ASSEMBLY PART NUMBER
	8	9	27.81 [1.095]	25.91 [1.020]	22.86 [.900]	9	10	5–104450–9
10 OBSOLETE	8	9	25.27 [.995]	23.37 [.920]	20.32 [.800]	8	9	~~5–104450–8~~
	8	9	22.73 [.895]	20.83 [.820]	17.78 [.700]	7	8	5–104450–7
10 OBSOLETE	8	9	20.19 [.795]	18.29 [.720]	15.24 [.600]	6	7	~~5–104450–6~~
	8	9	17.65 [.695]	15.75 [.620]	12.7 [.500]	5	6	5–104450–5
	8	9	15.11 [.595]	13.21 [.520]	10.16 [.400]	4	5	5–104450–4
	8	9	12.57 [.495]	10.67 [.420]	7.62 [.300]	3	4	5–104450–3
	8	9	10.03 [.395]	8.13 [.320]	5.08 [.200]	2	3	5–104450–2
	8	9	7.49 [.295]	5.59 [.220]	2.54 [.100]	1	2	5–104450–1
10 OBSOLETE		7	20.19 [.795]	18.29 [.720]	15.24 [.600]	6	7	~~1–104450–3~~
		7	15.11[.595]	13.21 [.520]	10.16 [.400]	4	5	1–104450–2
		7	10.03 [.395]	8.13 [.320]	5.08 [.200]	2	3	1–104450–1
		7	12.57 [.495]	10.67 [.420]	7.62 [.300]	3	4	1–104450–0
		1	27.81 [1.095]	25.91 [1.020]	22.86 [.900]	9	10	104450–9
10 OBSOLETE		1	25.27 [.995]	23.37 [.920]	20.32 [.800]	8	9	~~104450–8~~
		1	22.73 [.895]	20.83 [.820]	17.78 [.700]	7	8	104450–7
		1	20.19 [.795]	18.29 [.720]	15.24 [.600]	6	7	104450–6
		1	17.65 [.695]	15.75 [.620]	12.7 [.500]	5	6	104450–5
		1	15.11 [.595]	13.21 [.520]	10.16 [.400]	4	5	104450–4
		1	12.57 [.495]	10.67 [.420]	7.62 [.300]	3	4	104450–3
		1	10.03 [.395]	8.13 [.320]	5.08 [.200]	2	3	104450–2
		1	7.49 [.295]	5.59 [.220]	2.54 [.100]	1	2	104450–1

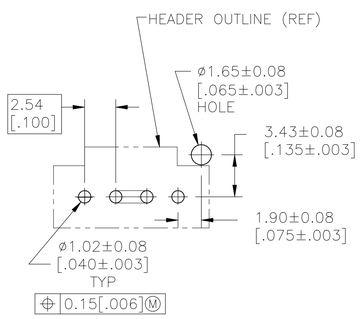

RECOMMENDED HOLE LAYOUT

DETAIL Z
POST DETAIL TYP
2 POST MINIMUM

THIS DRAWING IS A CONTROLLED DOCUMENT.

DIMENSIONS: mm

TOLERANCES UNLESS OTHERWISE SPECIFIED:
0 PLC ± –
1 PLC ± –
2 PLC ± –
3 PLC ± 0.38 [.005]
4 PLC ± –
ANGLES ± –

MATERIAL: SEE NOTE 6
FINISH: SEE TABLE

DWN R BROWN 09FEB01
CHK K WRIGHT 09FEB01
APVD K WRIGHT 09FEB01
PRODUCT SPEC 108–25034
APPLICATION SPEC –
WEIGHT 0.000000

TE Connectivity

NAME: HEADER ASSY, AMPMODU MTE, VERTICAL, WITH LATCH, SINGLE ROW, .100 CL, .025 SQ POSTS, PCB ORIENTATION, AND RETENTIVE POSTS

SIZE	CAGE CODE	DRAWING NO	RESTRICTED TO
A1	00779	C–104450	–

CUSTOMER DRAWING | SCALE 4:1 | SHEET 1 OF 1 | REV AF

4805 (1/15)