THIS DRAWING IS UNPUBLISHED. RELEASED FOR PUBLICATION AUGUST ,2006.
© COPYRIGHT 2006 By – ALL RIGHTS RESERVED.

REVISIONS

P	LTR	DESCRIPTION	DATE	DWN	APVD
	A1	ECR–18–012908	15AUG2018	RZ	RS

NOTES:

1. PACK IN ACCORDANCE WITH TE SPEC 107–3275
2. Au PLATING: 50u"
3. Passivation
4. ALL DIMENSIONS ARE NOMINAL FOR REFERENCE ONLY UNLESS OTHERWISE STATED

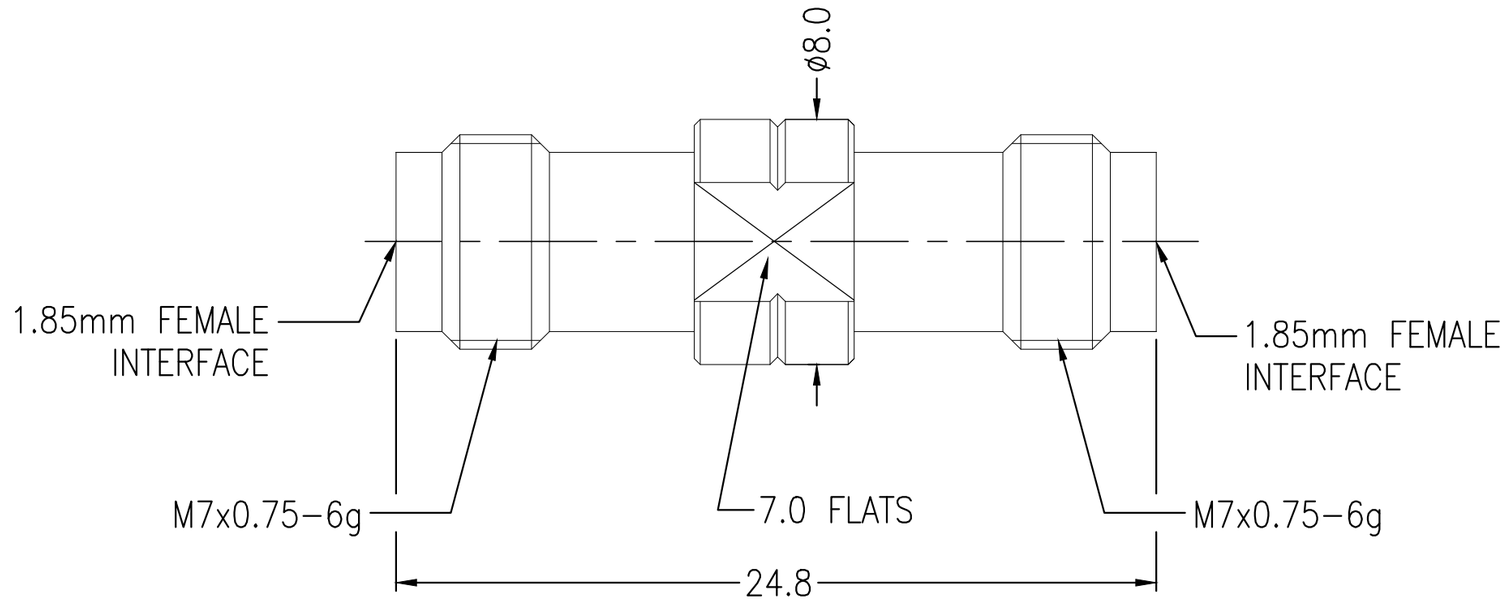

ELECTRICAL	MECHANICAL	ENVIRONMENTAL
Frequency Range (GHz) DC to 67GHz	Recommended Mating force or Torque 0.9 N.m	Temperature Rating –40°C TO +85°C
Voltage Rating (Peak) @ Sea Level 335 VAC RMS	Mating cycles 500 cycles	
Insulation Resistance (MIN.) 5000 M ohms		
Contact Resistance (Milliohms MAX) Center Contact 3, Outer Contact 2	VSWR: 1.20 Max @ DC––40 GHz; 1.25 Max @ 40––67 GHz	
Dielectric Withstand Voltage: 500 Volts RMS Max	RF–Leakage: N/A	
Insertion Loss : 0.05√F(GHz) dB	Intermodulation: N/A	

QUANTITY PER ASSY	MATERIAL	DESCRIPTION	ITEM
2	PVC (BLACK)	DUST CAP	4
1	PEI	INSULATION	3
1	BeCu (2)	CENTER CONTACT	2
1	STEEL (3)	BODY	1
–1			
(1)			

PARTS LIST

THIS DRAWING IS A CONTROLLED DOCUMENT.

DIMENSIONS: mm

TOLERANCES UNLESS OTHERWISE SPECIFIED:
0 PLC ± –
1 PLC ± 0.2
2 PLC ± 0.1
3 PLC ± –
4 PLC ± –
ANGLES ± –

MATERIAL: SEE TABLE

FINISH: –

DWN	RZ	05 JUN 2018
CHK	BW	05 JUN 2018
APVD	RS	05 JUN 2018
PRODUCT SPEC	—	
APPLICATION SPEC	—	
WEIGHT	0.000000	

TE Connectivity

NAME: ADAPTER 1.85mm FEMALE TO 1.85mm FEMALE –

SIZE	CAGE CODE	DRAWING NO	RESTRICTED TO
A3	00779	C–2081550	—

CUSTOMER DRAWING

SCALE	SHEET	REV
5:1	1 OF 1	A1

1470–19 (1/15)