SIGN	DATE	DESCRIPTION	APPROVER
1	01/26'07	The Soldering temperature from 245° to 250°	Aaron
2	01/26'07	Add "VDE" stipulation	Aaron
3	12/25'08	Add "TUV" stipulation	Tony
4	5/06'10	Electrical changed	Runner
5	6/03'10	Structure changed	Cheng Bo
6	12/25'10	How to order is changed	Runner

THIS IS CAD DRAWING, DO NOT REVISE MANUALLY!!!

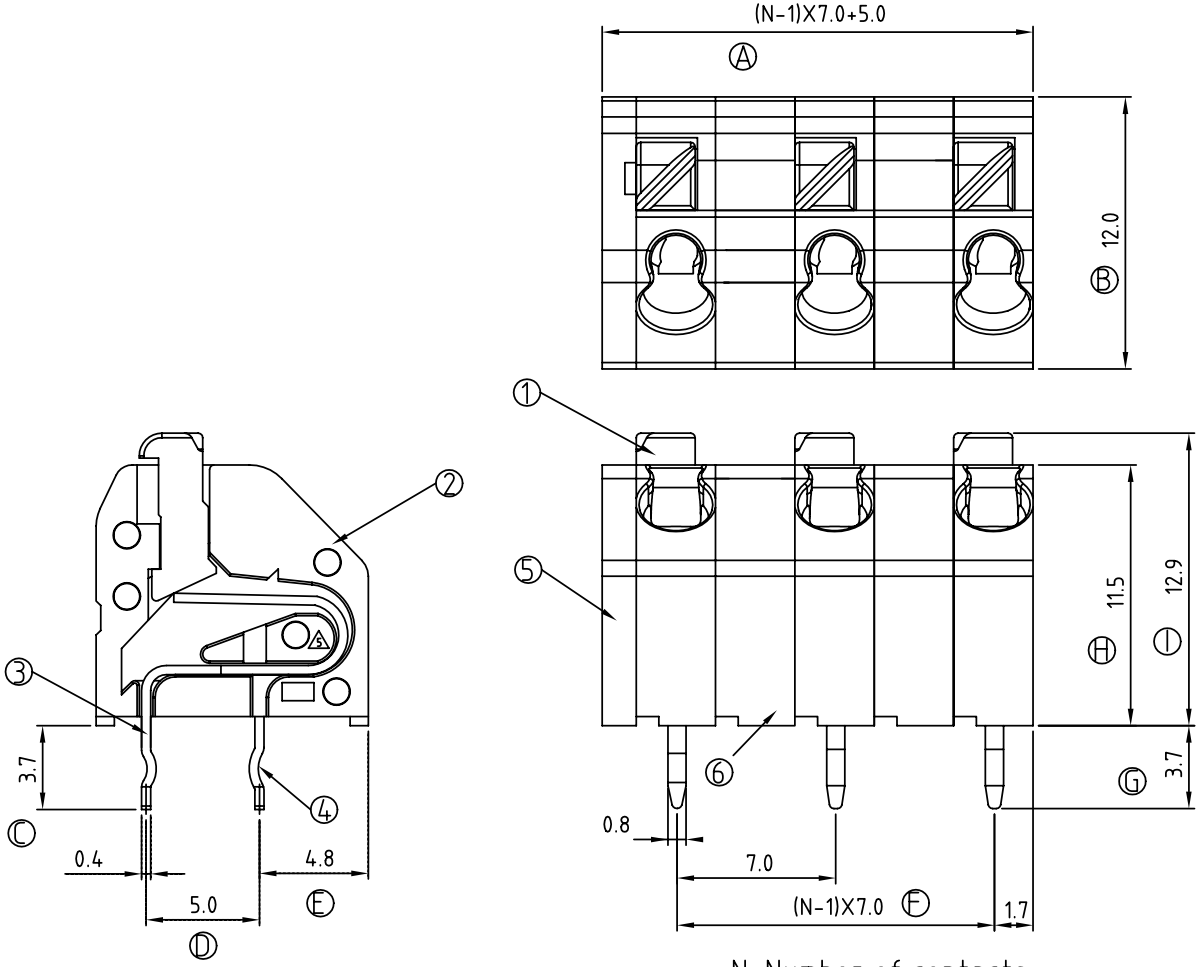

N=Number of contacts

Material:

- Item ① Insulator(lever): Thermoplastic (UL94V-0)
- Item ② Insulator(housing): Thermoplastic (UL94V-0)
- Item ③ Side contact pin: PhBz.Tin plated.
- Item ④ Center contact pin: PhBz.Tin plated.
- Item ⑤ Side Cover : Thermoplastic (UL94V-0)
- Item ⑥ Insulator(Board): Thermoplastic (UL94V-0)

Electrical:	cULus	VDE
Voltage rating:	300V	250V
Current rating:	6A	6A
Wire range:	0.5-0.75 mm²	
Solid wire(AWG):	16-22	
Stranded wire(AWG):	16-22	
Wire strip length:	8.5-10.0mm	
Withstanding Voltage:	1.6KV	2 KV
Operating temperature:	-40°C to +115°C	
Soldering temperature:	250°C ±10°C/5 Sec	
Safety Approval:		

PART NO.

HC xx 10 x 0 xxxx G

Poles
02 2Contacts
03 3Contacts
, ,
12 12Contacts

Color
2 Red
3 Orange
5 Gree(RAL6018/T)
8 Grey(RAL7004/P)

0000 Standard @ Logo
000A Standard ANY Logo
Any special item by customer request, please contact sales department.

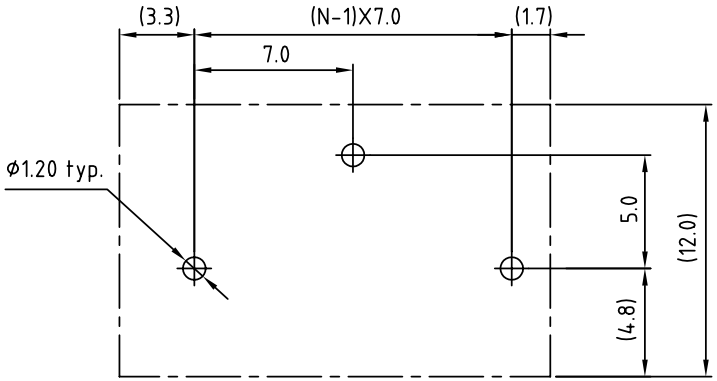

P.C.B. LAYOUT

ANYTEK

CUSTOMER COPY

ALL RIGHTS RESERVED. REPRODUCTION OR ISSUE TO THIRD PARTIES IN ANY FORM WHATEVER IS NOT PERMITTED WITHOUT WRITTEN AUTHORITY FROM THE PROPRIETOR. PROPERTY OF ANYTEK TECHNOLOGY CO., LTD

TITLE	HC - 7.0mm Series				
PART NO.	HCxx10x0xxxxG			DWG NO.	8HC0201
APPROVED	CHECKED	DESIGNED	DRAWN	CUST NO.	
		Runner 2010.12.25	Cheng Bo 2010.06.03	UNIT: mm / SCALE: NONE / SHEET: 01/01 / REV.: G	

Tolerance	
X.	±0.50
X.X	±0.30
X.XX	±0.10
X°	±1°