THIS DRAWING IS UNPUBLISHED. RELEASED FOR PUBLICATION – , – .
© COPYRIGHT – By – ALL RIGHTS RESERVED.

| LOC | DIST |
|---|---|
| — | — |

REVISIONS

| P | LTR | DESCRIPTION | DATE | DWN | APVD |
|---|---|---|---|---|---|
| | A | RELEASE | 27SEP2012 | BL | MY |

NOTE:

MATERIAL AND FINISH

1. BODY: STAINLESS STEEL PASSIVATE
2. CENTER CONTACT: BERYLLIUM COPPER PLATED GOLD
3. DIELECTRIC: PTFE

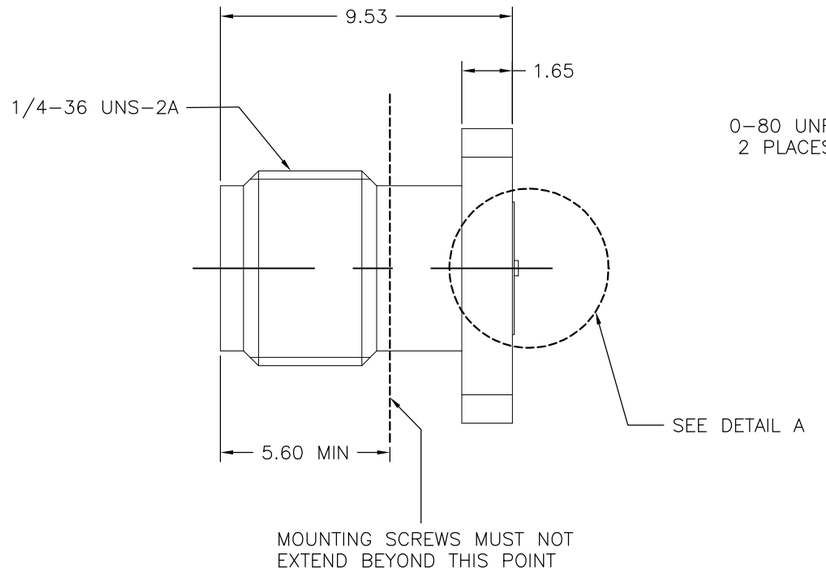


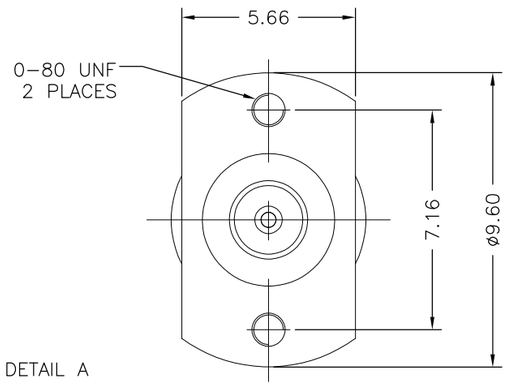


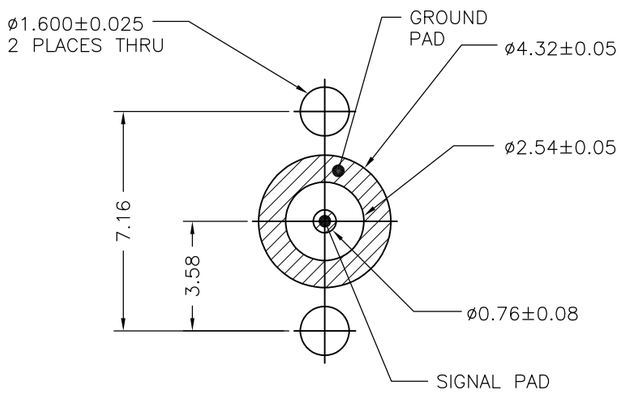


RECOMMENDED PCB LAYOUT

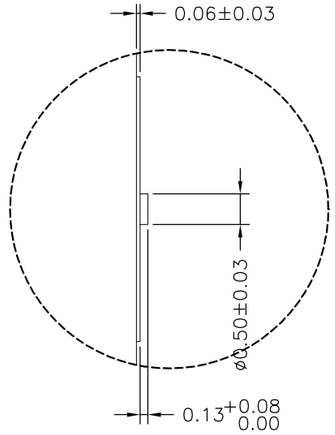


DETAIL A 10:1

619550–1

PART NUMBER

THIS DRAWING IS A CONTROLLED DOCUMENT.

DIMENSIONS: mm

TOLERANCES UNLESS OTHERWISE SPECIFIED:

| | |
|---|---|
| 0 PLC | ± – |
| 1 PLC | ± 0.2 |
| 2 PLC | ± 0.10 |
| 3 PLC | ± – |
| 4 PLC | ± – |
| ANGLES | ± 1 |

MATERIAL: SEE TABLE

FINISH: SEE TABLE

| | | |
|---|---|---|
| DWN | BING LIU | 27 SEP 2012 |
| CHK | RITA ZUO | 27 SEP 2012 |
| APVD | MARTIN YE | 27 SEP 2012 |
| PRODUCT SPEC | — | |
| APPLICATION SPEC | — | |
| WEIGHT | — | |

TE Connectivity

NAME: SMA JACK 2 H FLANGE – –

| SIZE | CAGE CODE | DRAWING NO | RESTRICTED TO |
|---|---|---|---|
| A3 | 00779 | C–619550 | — |

CUSTOMER DRAWING

SCALE 5:1 SHEET 1 OF 1 REV A