SIGN	DATE	DESCRIPTION	APPROVER
1	01/20'07	The Soldering temperature from 245° to 250°	Aaron
2	2010.08.12	The design is changed	Chen Bo
3	2012.07.18	The tolerance are added	Runner
		THIS IS CAD DRAWING, DO NOT REVISE MANUALLY!!!	

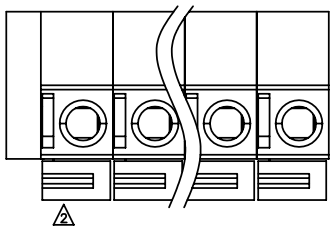

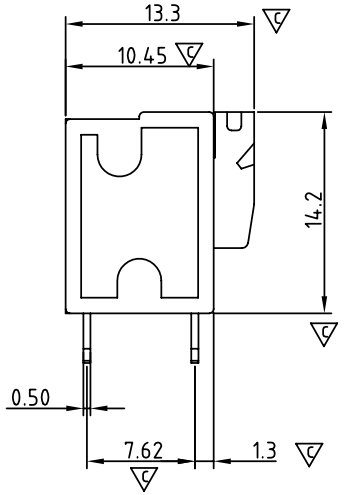

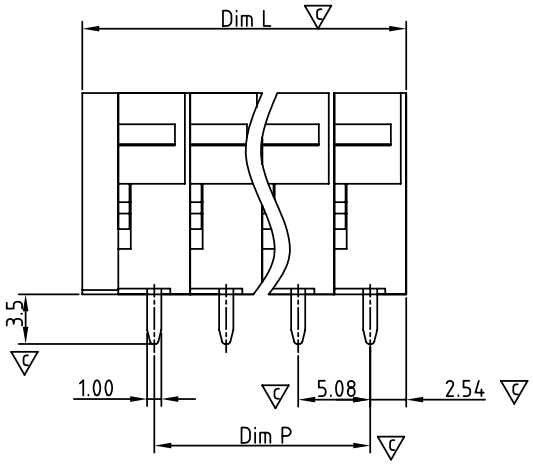

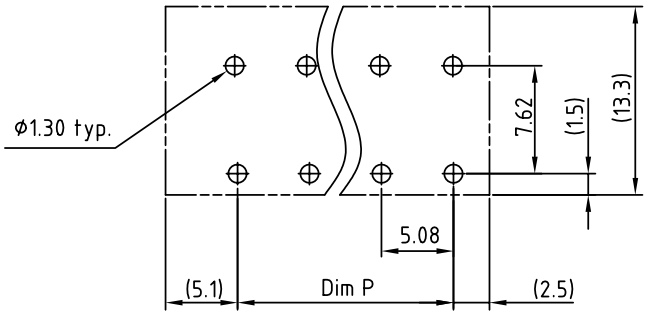

P.C.B. LAYOUT

Material

- Terminal lever:Thermoplastic (UL94 V-0) Orange RAL2011/P
- Terminal housing: Thermoplastic (UL94 V-0)
- Terminal cover: Thermoplastic (UL94V-0)
- Solder Pin : Brass Tin plated
- Wire guard: Stainless steel

Electrical cULus/VDE

- Voltage rating: 300VAC/250VAC
- Current rating: 10A/10A
- Wire range: 0.75-1.5mm^2
- Solid wire(AWG): 14-24
- Stranded wire(AWG): 14-24
- Wire strip length: 9-10mm
- Withstanding Voltage: 1.6KV/2KV
- Operating temperature: -40°C to +115°C
- Soldering temperature: 250°C±10°C/5 Sec
- Safety Approval: c UL us VDE 1
- Critical dimension:

HA xx 00 x 0 xxxx G

- xx: 02 2 Poles; 03 3 Poles; ... ...; 24 24 Poles
- x: Body color: 2 Red; 3 Orange; 5 Green(RAL6018/T); 8 Grey(RAL7004/P)
- xxxx: 0000: "@" Logo (Standard); 000A: "ANYTEK" Mark; Any special item by customer requst. please contact sales department.
- G: RoHS compliant (lead<4%) In copper Alloy

3 N = Number of poles
Dim L=(Nx5.08)+2.54
Dim P=(N-1)x5.08

Poles	Dim L	Dim P
2-6p	±0.20	
7-12p	±0.25	
13-24p	±0.40	

ANYTEK

CUSTOMER COPY

ALL RIGHTS RESERVED. REPRODUCTION OR ISSUE TO THIRD PARTIES IN ANY FORM WHATEVER IS NOT PERMITTED WITHOUT WRITTEN AUTHORITY FROM THE PROPRIETOR. PROPERTY OF ANYTEK TECHNOLOGY CO., LTD

TITLE	HA-5.08mm 90° series				
PART NO.	HAxx00x0xxxxG			DWG NO.	8HA0101
APPROVED	CHECKED	DESIGNED	DRAWN	CUST NO.	
		Runner 2012.07.18	Chen Bo 2010.08.12	UNIT: mm / SCALE: NONE / SHEET: 01/01	REV.: F

Tolerance	
X.	±0.50
X.X	±0.30
X.XX	±0.10
X°	±1°