Alle Rechte vorbehalten/ *All rights reserved*

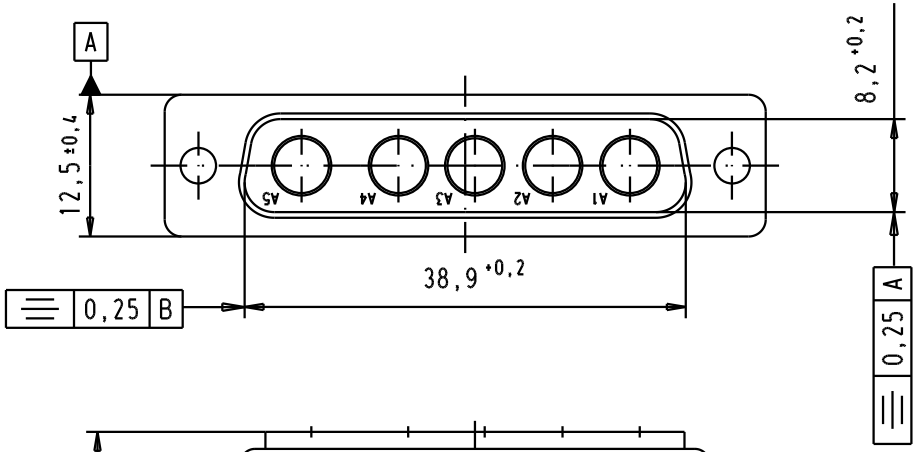

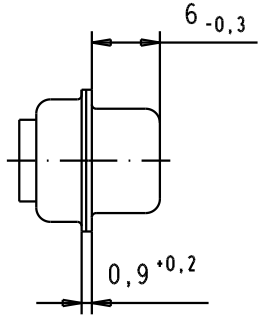

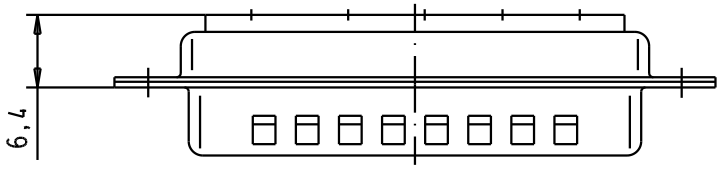

PCB layout hole, component side

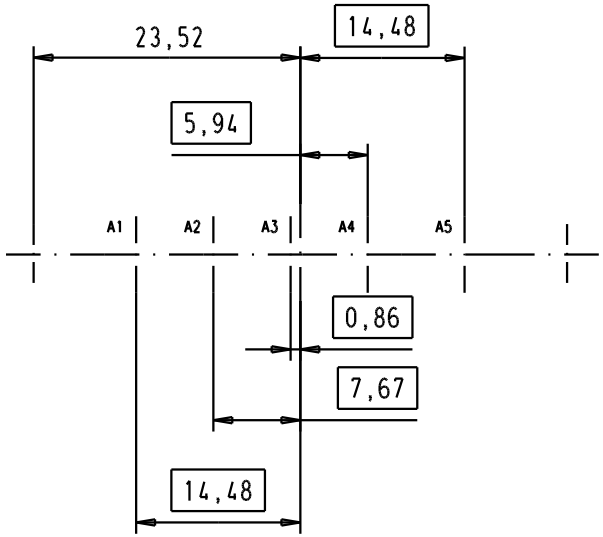

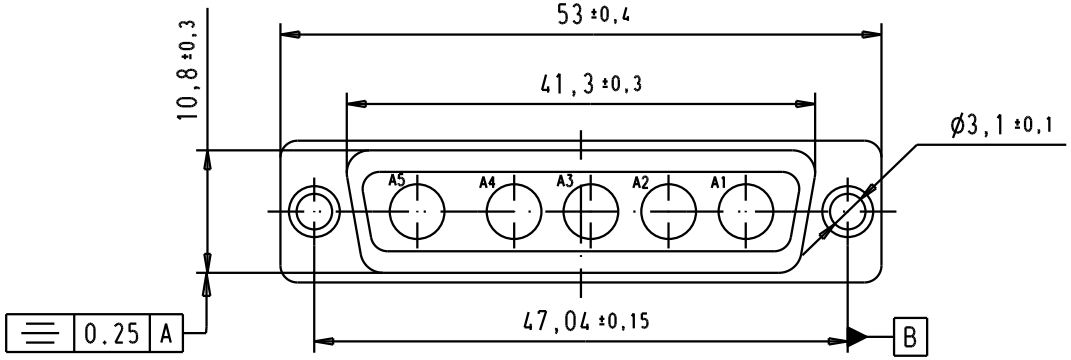

09 69 310 0055.500	Non magnetic					Dat.	Name	All Dim. in mm Orig. Size DIN A 4	D-Sub, male, 5W5 without contacts, with tin plated shell with dimples.	Maßstab/ *Scale* 1,5:1
					Detail.	12/11/01	AF			
					Insp.					
09 69 310 0055		32119	23/06/04	AC	Stand.					
		31519	03/07/03	TCP	HARTING EURL F-95972 Paris				TB 09 69 310 0055	Blatt/ *Page* 1/1
Part number		29742	12/11/01	AF					Sub.	
		Mod.	Dat.	Name						