	YAZAKI PART NO.	COLOR
	7123-8306	NATURAL
	7123-8306-30	BLACK
1	7123-8306-80	BROWN
2	7123-8306-90	BLUE

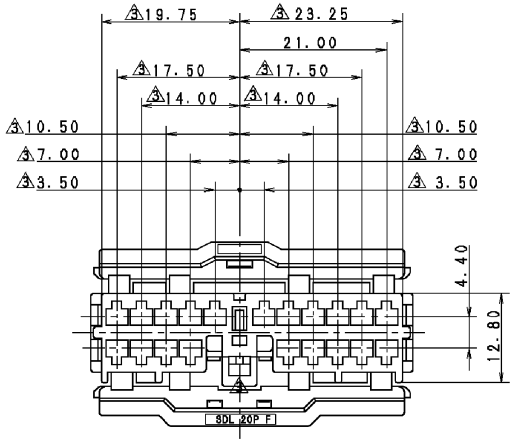

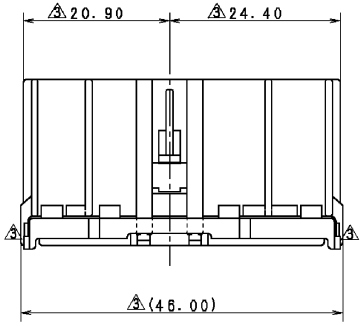

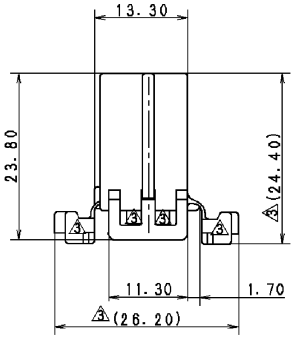

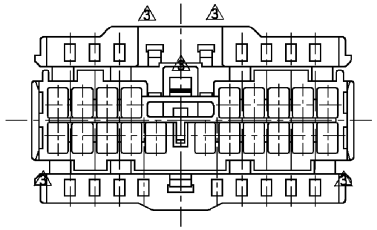

注 記

1. かん合相手は，7122-8306 ETC..
2. 使用ターミナルは，7116-1473，7116-1473-08.
   7116-1474，7116-1474-08

NOTE

1. MATCHING HOUSING NO. :7122-8306 ETC..
2. MATCHING TERMINAL NO. 7116-1473，7116-1473-08.
   7116-1474，7116-1474-08.

LET	DATE	REVISION RECORD	NO.	CHKD
4	10. 11. 15	CHANGED PART NAME	C10-ZA96	R. M
3	08. 11. 24	CHANGED FORM, ETC.	C08-Z784	T. K
2	90. 05. 31	色品番追加	C90-6583	貞石
1	89. 04. 03	色品番追加	C89-6498	長谷川
	88. 02. 25	新 設	8MC-0257	塚本

GENERAL TOLERANCE	10MAX	50MAX	100MAX	250MAX	2500VR	ANGLE	ECCENT
A	±0. 15	±0. 2	±0. 3	±0. 5	±0. 75	±30′	0. 1
B	±0. 2	±0. 3	±0. 55	±0. 95	±1. 4	±30′	0. 1
C	±0. 3	±0. 5	±0. 8	±1. 4	±2	±30′	0. 15
SPECIFIED						MASS	

CUSTOMER									
CUSTOMER PART NO.		CUSTOMER DWG NO.							
OFFICE		TRIAL PART NO. 086123-1315							
VENDOR									
VENDOR NO.									
DWG TYPE	DWG SOURCE		DWG DATE	UNIT	SCL	ANGLE			
R	新 設		88. 02. 25	mm	2/1	3			
APPROVED	CHECKED	CHECKED	DESIGN	DRAWN					
S. MIZUSE	———	R. CABANGAL	H. SAITO	R. MAJERANO					
10. 11. 15	———	10. 11. 15	88. 01. 12	10. 11. 15					

MATL. P. B. T
SPEC.

TREAT.
& FIN.

NAME 4 SDL TYPE HOUSING
20P FEMALE

PART NO.
CH. CODE 7123-8306 ETC.

DWG NO. 7123-8306:R

SET DWG NO.

YAZAKI CORPORATION

ISSUE MARK