THIS DRAWING IS UNPUBLISHED. RELEASED FOR PUBLICATION - ,- .
© COPYRIGHT - By - ALL RIGHTS RESERVED.

LOC	DIST
AD	00

REVISIONS

P	LTR	DESCRIPTION	DATE	DWN	APVD
	K3	REVISED PER ECO-20-000170	21MAY2020	KR	JO

△1 0.38µm[.000015] MIN GOLD ALL OVER 1.27µm[.000050] MIN NICKEL IN CONTACT AREA

△2 0.76µm[.000030] MIN GOLD ALL OVER 1.27µm[.000050] MIN NICKEL IN CONTACT AREA

△3 0.51µm[.000020] MIN GOLD ALL OVER 1.27µm[.000050] MIN NICKEL IN CONTACT AREA

△4 NO INK STAMPING ON 1-153666-5 PART

△5 ALL PARTS ASSEMBLED IN MEXICO MUST BE STAMPED "ASSY IN MEXICO"
THE WORD "MEXICO" CAN BE SUBSTITUTED ONLY WHERE PART SIZE PROHIBITS
STAMPING "ASSY IN MEXICO" INK STAMP COLOR WHITE OR HOT STAMP (NO WHITE TAPE)
115-9009 APPROX. WHERE SHOWN SIDE OPTIONAL

△6 MATTE TIN PLATED CONTACT TAILS

△7 HOUSING: GLASS FILLED POLYESTER, BLACK
CONTACTS: PHOSPHOR BRONZE

△8 MOLDED CHARACTERS (UPPER & LOWER CASE LETTERS FOLLOWED BY UPPER CASE
LETTERS AA, AB, ETC.) OMITTING LETTERS G,I,O, & Q

△9 AMP PART NUMBER AND DATE CODE INK STAMPED WHITE OR HOT STAMP
NO WHITE TAPE IN THIS AREA (SIDE OPTIONAL)

△10 BRIGHT TIN POST

△11 OBSOLETE PARTS: OBSOLETE CIS STREAMLINING PER D.RENAUD/D.SINISI

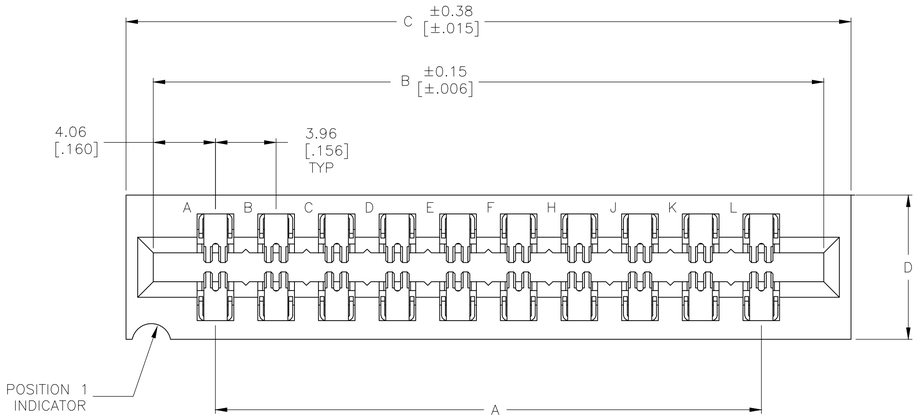

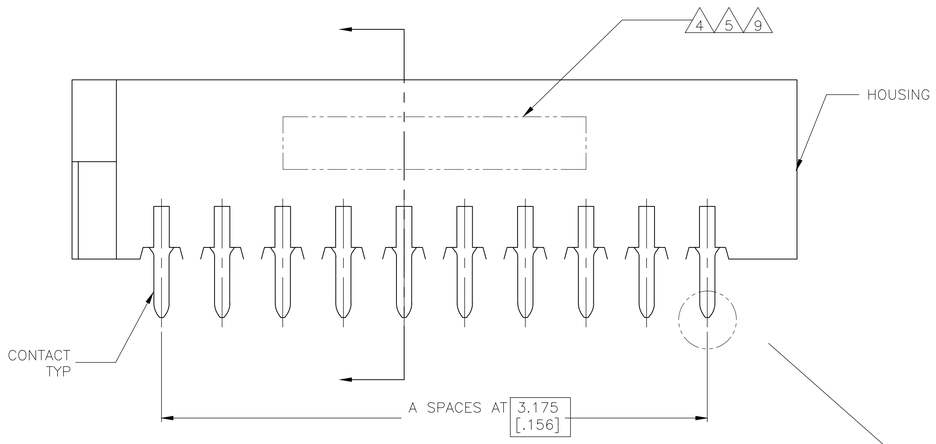

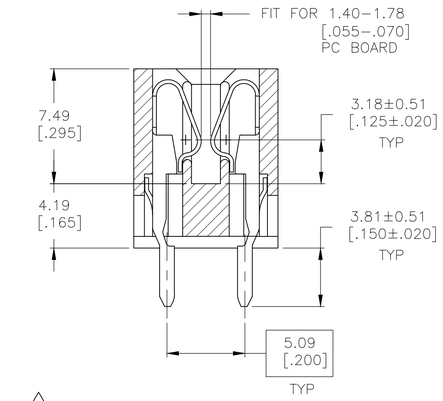

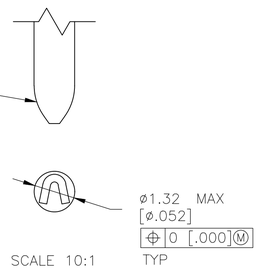

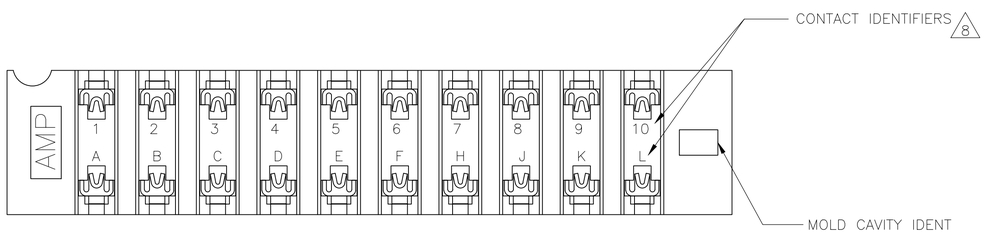

	D	C	B	A	FINISH	NO OF POSN	PART NUMBER
△11 OBSOLETE	11.10 [.437]	178.10 [7.012]	174.55 [6.872]	166.42 [6.552]	△2 △6	43	~~8-530666-3~~
	11.10 [.437]	118.67 [4.672]	115.11 [4.532]	106.98 [4.212]		28	8-530666-2
△11 OBSOLETE	11.10 [.437]	126.59 [4.984]	123.04 [4.844]	114.91 [4.524]		30	~~7-530666-9~~
	9.40 [.370]	94.89 [3.736]	91.34 [3.596]	83.21 [3.276]		22	7-530666-6
△11 OBSOLETE	9.40 [.370]	79.04 [3.112]	75.49 [2.972]	67.36 [2.652]		18	~~7-530666-5~~
	9.40 [.370]	67.16 [2.644]	63.60 [2.504]	55.47 [2.184]		15	7-530666-4
	9.40 [.370]	55.27 [2.176]	51.71 [2.036]	43.59 [1.716]		12	7-530666-3
	9.40 [.370]	47.35 [1.864]	43.79 [1.724]	35.66 [1.404]		10	7-530666-2
	9.40 [.370]	31.50 [1.240]	27.94 [1.100]	19.81 [.780]		6	7-530666-1
△11 OBSOLETE	11.10 [.437]	178.10 [7.012]	174.55 [6.872]	166.42 [6.552]	△2 △10	43	~~3-530666-3~~
	9.40 [.370]	118.67 [4.672]	115.11 [4.532]	106.98 [4.212]		28	3-530666-2
OBSOLETE	11.10 [.437]	182.07 [7.168]	178.51 [7.028]	170.38 [6.708]		44	3-530666-1
	11.10 [.437]	150.37 [5.920]	146.81 [5.780]	138.68 [5.460]		36	3-530666-0
	11.10 [.437]	126.59 [4.984]	123.04 [4.844]	114.91 [4.524]		30	2-530666-9
	9.40 [.370]	106.78 [4.204]	103.23 [4.064]	95.10 [3.744]		25	2-530666-8
	9.40 [.370]	102.82 [4.048]	99.26 [3.908]	91.14 [3.588]		24	2-530666-7
	9.40 [.370]	94.89 [3.736]	91.34 [3.596]	83.21 [3.276]		22	2-530666-6
△11 OBSOLETE	9.40 [.370]	79.04 [3.112]	75.49 [2.972]	67.36 [2.652]		18	~~2-530666-5~~
	9.40 [.370]	67.16 [2.644]	63.60 [2.504]	55.47 [2.184]		15	2-530666-4
	9.40 [.370]	55.27 [2.176]	51.71 [2.036]	43.59 [1.716]		12	2-530666-3
	9.40 [.370]	47.35 [1.864]	43.79 [1.724]	35.66 [1.404]		10	2-530666-2
	9.40 [.370]	31.50 [1.240]	27.94 [1.100]	19.81 [.780]		6	2-530666-1
OBSOLETE	9.40 [.370]	118.67 [4.672]	115.11 [4.532]	106.98 [4.212]	△3 △10	28	1-530666-5
	11.10 [.437]	178.10 [7.012]	174.55 [6.872]	166.42 [6.552]	△1 △10	43	1-530666-3
	9.40 [.370]	118.67 [4.672]	115.11 [4.532]	106.98 [4.212]		28	1-530666-2
	11.10 [.437]	182.07 [7.168]	178.51 [7.028]	170.38 [6.708]		44	1-530666-1
	11.10 [.437]	150.37 [5.920]	146.81 [5.780]	138.68 [5.460]		36	1-530666-0
	11.10 [.437]	126.59 [4.984]	123.04 [4.844]	114.91 [4.524]		30	530666-9
	9.40 [.370]	106.78 [4.204]	103.23 [4.064]	95.10 [3.744]		25	530666-8
	9.40 [.370]	102.82 [4.048]	99.26 [3.908]	91.14 [3.588]		24	530666-7
	9.40 [.370]	94.89 [3.736]	91.34 [3.596]	83.21 [3.276]		22	530666-6
	9.40 [.370]	79.04 [3.112]	75.49 [2.972]	67.36 [2.652]		18	530666-5
	9.40 [.370]	67.16 [2.644]	63.60 [2.504]	55.47 [2.184]		15	530666-4
	9.40 [.370]	55.27 [2.176]	51.71 [2.036]	43.59 [1.716]		12	530666-3
	9.40 [.370]	47.35 [1.864]	43.79 [1.724]	35.66 [1.404]		10	530666-2
	9.40 [.370]	31.50 [1.240]	27.94 [1.100]	19.81 [.780]		6	530666-1

THIS DRAWING IS A CONTROLLED DOCUMENT.

DIMENSIONS: mm [INCHES]

TOLERANCES UNLESS OTHERWISE SPECIFIED:
0 PLC ± -
1 PLC ± -
2 PLC ± 0.13 [.005]
3 PLC ± -
4 PLC ± -
ANGLES ± -

MATERIAL △7

FINISH SEE TABLE

DWN D. HARDY 12SEP97
CHK R. STONE 16SEP97
APVD D. WIKE 18SEP97

PRODUCT SPEC 108-9044
APPLICATION SPEC —
WEIGHT —

CUSTOMER DRAWING

TE Connectivity

NAME HOUSING ASSEMBLY, LOW PROFILE EDGE CONNECTOR, FLOW SOLDER FOR .052 DIA HOLE, .156 X .200 CENTERS

SIZE	CAGE CODE	DRAWING NO	RESTRICTED TO
A1	00779	C-530666	—

SCALE 5:1 SHEET 1 OF 1 REV K3

4805 (3/11)