THIS DRAWING IS UNPUBLISHED. RELEASED FOR PUBLICATION -,- .
© COPYRIGHT 520422By - ALL RIGHTS RESERVED.

LOC	DIST
GP	00

REVISIONS

P	LTR	DESCRIPTION	DATE	DWN	APVD
	C	REVISED PER ECO-11-019758	13FEB2012	CJV	CWR

1. PREFIX AND SUFFIX NUMBERS MUST MATCH THOSE ON PLUG ASSEMBLY FOR PARTS TO MATE.
2. POLYESTER, FLAME RETARDANT, UL 94V-0 RATED, GLASS FILLED, BLACK.
3. 0.76µm [.000030] MIN BRIGHT TIN OVER 1.27µm [.000050] MIN NICKEL.
4. 1.27µm [.000050] MIN GOLD ON MATING SURFACE FOR A LENGTH OF 2.54 [.100] MIN, 3.81µm [.000150] MIN MATTE TIN ON OPPOSITE END FOR A LENGTH OF 3.81 [.150] MIN, BOTH OVER 1.27µm [.000050] MIN NICKEL ON ENTIRE CONTACT.
5. OBSOLETE.
6. DIMENSION INDICATES CONTACT MATING AREA.
7. PLATING MEASUREMENT POINT.

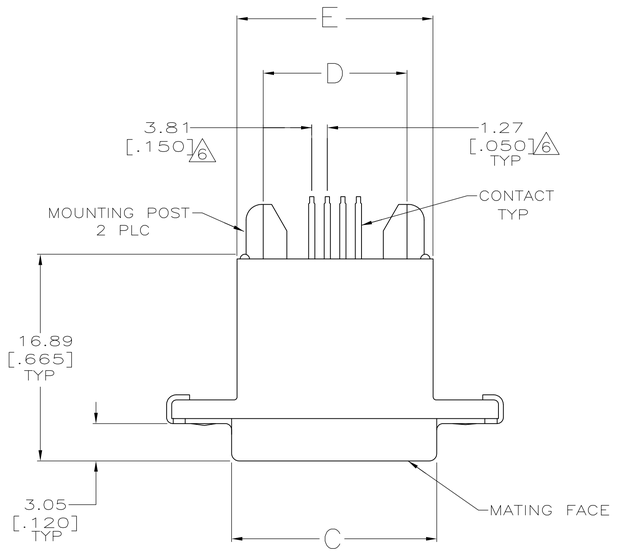

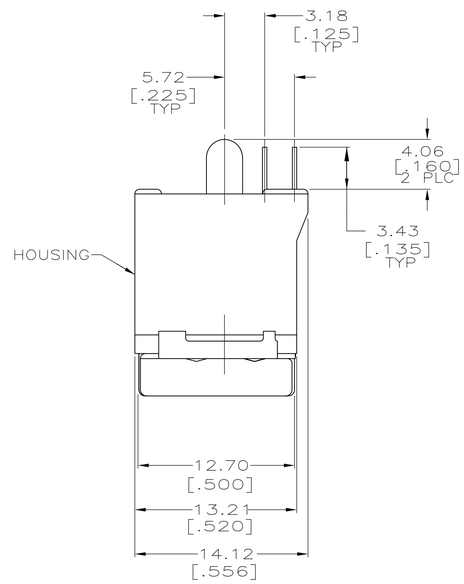

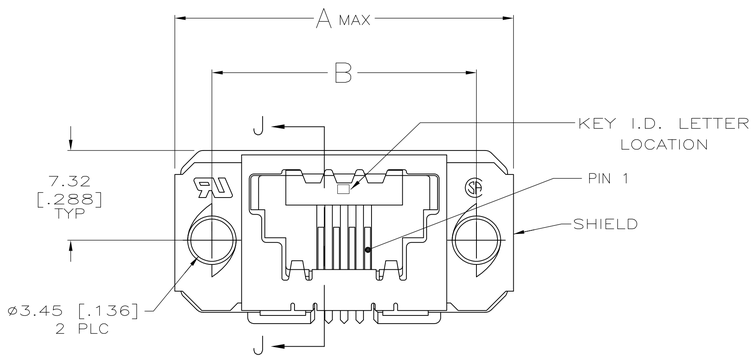

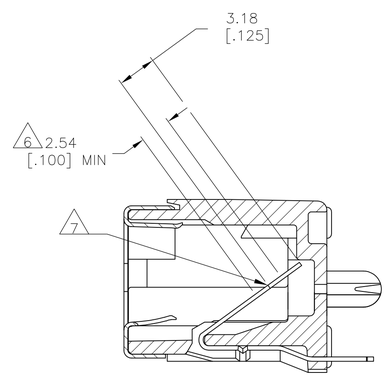

SECTION J-J

E	D	C	B	A	NO OF POSN	KEY I.D. LETTER	PART NO
31.24 [1.230]	26.67 [1.050]	31.98 [1.259]	36.83 [1.450]	43.18 [1.700]	16	E	5-1761183-6
21.08 [.830]	16.51 [.650]	21.82 [.859]	26.67 [1.050]	33.02 [1.300]	8	E	5-1761183-3
18.54 [.730]	13.97 [.550]	19.28 [.759]	24.13 [.950]	30.48 [1.200]	6	E	5-1761183-2
16.00 [.630]	11.43 [.450]	16.74 [.659]	21.59 [.850]	27.94 [1.100]	4	E	5-1761183-1
16.00 [.630]	11.43 [.450]	16.74 [.659]	21.59 [.850]	27.94 [1.100]	4	D	4-1761183-1
21.08 [.830]	16.51 [.650]	21.82 [.859]	26.67 [1.050]	33.02 [1.300]	8	C	3-1761183-3
16.00 [.630]	11.43 [.450]	16.74 [.659]	21.59 [.850]	27.94 [1.100]	4	C	3-1761183-1
31.24 [1.230]	26.67 [1.050]	31.98 [1.259]	36.83 [1.450]	43.18 [1.700]	16	A	1-1761183-6
21.08 [.830]	16.51 [.650]	21.82 [.859]	26.67 [1.050]	33.02 [1.300]	8	A	1-1761183-3
18.54 [.730]	13.97 [.550]	19.28 [.759]	24.13 [.950]	30.48 [1.200]	6	A	1-1761183-2
16.00 [.630]	11.43 [.450]	16.74 [.659]	21.59 [.850]	27.94 [1.100]	4	A	1-1761183-1

THIS DRAWING IS A CONTROLLED DOCUMENT.

DIMENSIONS: mm [INCHES]

TOLERANCES UNLESS OTHERWISE SPECIFIED:
0 PLC ± -
1 PLC ± -
2 PLC ± -
3 PLC ± .038 [.015]
4 PLC ± -
ANGLES ± -

MATERIAL 2
FINISH 3 4

DWN B. MCMASTER 20APR04
CHK C. ROHDE 20APR04
APVD M. WALMSLEY 20APR04
PRODUCT SPEC 108-2047
APPLICATION SPEC 114-2081
WEIGHT -

TE Connectivity

NAME RECEPTACLE ASSEMBLY, TOP ENTRY, SDL

SIZE A1 | CAGE CODE 00779 | DRAWING NO C-1761183 | RESTRICTED TO -

CUSTOMER DRAWING | SCALE 4:1 | SHEET 1 OF 1 | REV C

4805 (3/11)