Jan.1.2022 Copyright 2022 HIROSE ELECTRIC CO., LTD. All Rights Reserved.
In case of consideration for using Automotive equipment / device which demand high reliability, kindly contact our sales window correspondents.

	COUNT	DESCRIPTION OF REVISIONS	BY	CHKD	DATE		COUNT	DESCRIPTION OF REVISIONS	BY	CHKD	DATE
△					. .	△					. .
△					. .	△					. .
△					. .	△					. .

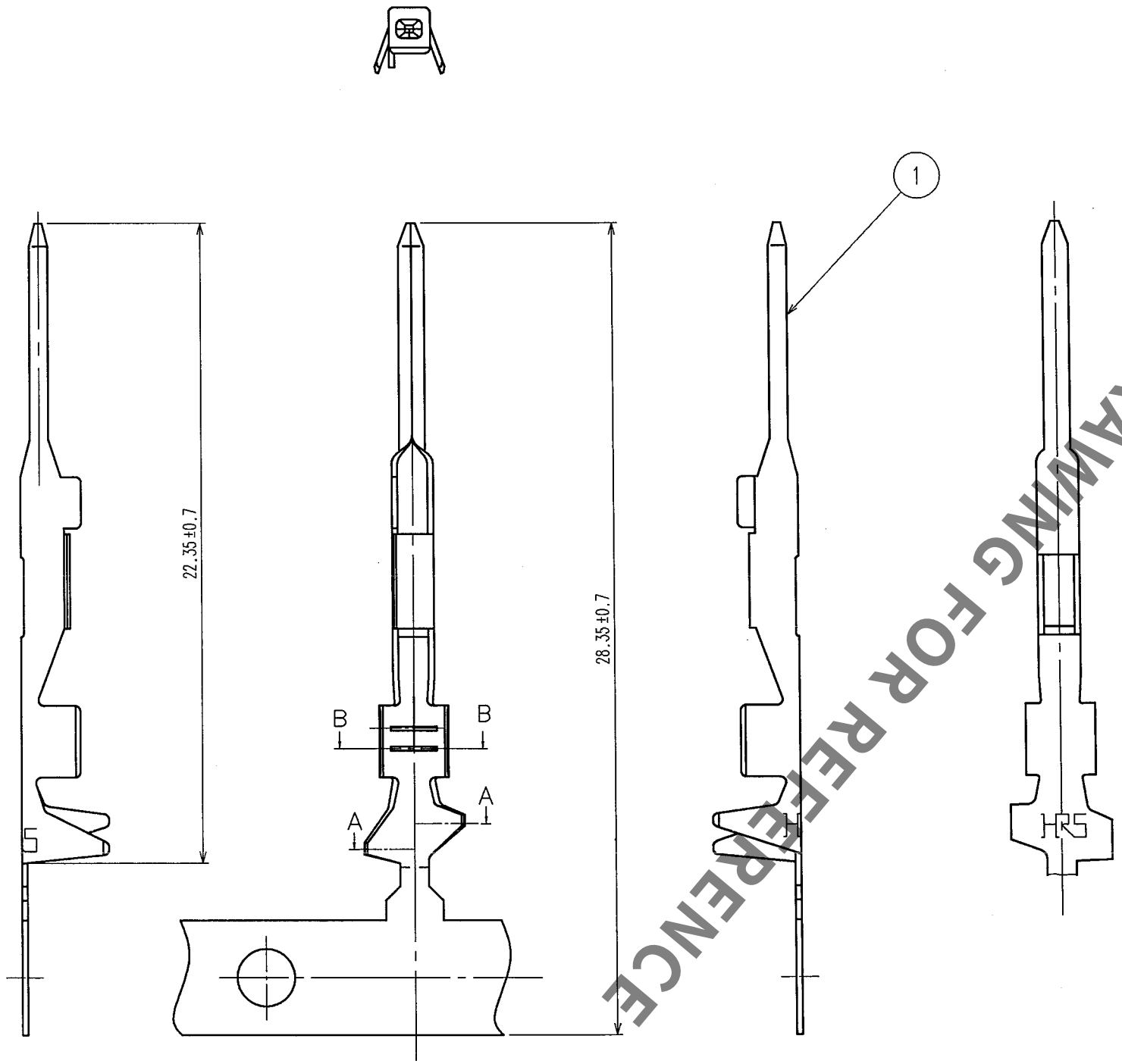

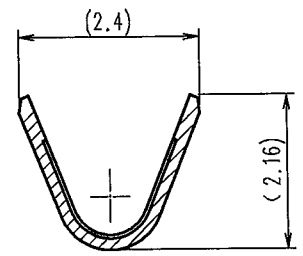

B-B(10:1)

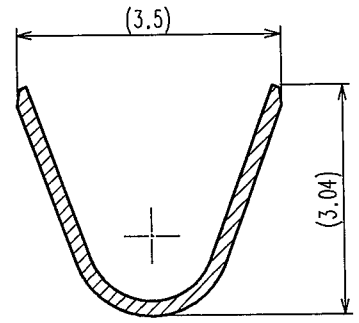

A-A(10:1)

HRS DRAWING FOR REFERENCE

NOTES
1 PER REEL : 7000 CONTACTS.

NO.	MATERIAL	FINISH, REMARKS	NO.	MATERIAL	FINISH, REMARKS
			1	CUPPER ALLOY	TIN PLATED

CODE NO.(OLD)	DRAWN	DESIGNED	CHECKED	APPROVED	RELEASED
CL?	M.OKADA '04.10.10	M.OKADA '04.10.10	K.Sato 04.10.12	K.Sato 04.10.12	. .

SCALE 1 : 1	DRAWING NO. EDC3-165910	PART NO. GT10SC-2022PCF
UNITS mm	HRS HIROSE ELECTRIC CO., LTD	CODE NO. CL760-0016-1 1/1

TO
AMC

FORM NO.229