THIS DRAWING IS UNPUBLISHED. RELEASED FOR PUBLICATION -,- .
© COPYRIGHT - By - ALL RIGHTS RESERVED.

LOC	DIST
G	14

REVISIONS

P	LTR	DESCRIPTION	DATE	DWN	APVD
	C2	REVISED PER ECO-14-015178	09OCT2014	NK	DR

1. STAMP "AMP 16-14 HD*" LOCATED APPROX AS SHOWN.
2. TONGUE MATERIAL THK IS .050 MAX
3. FOR .230 MAX WIRE INSULATION DIA.

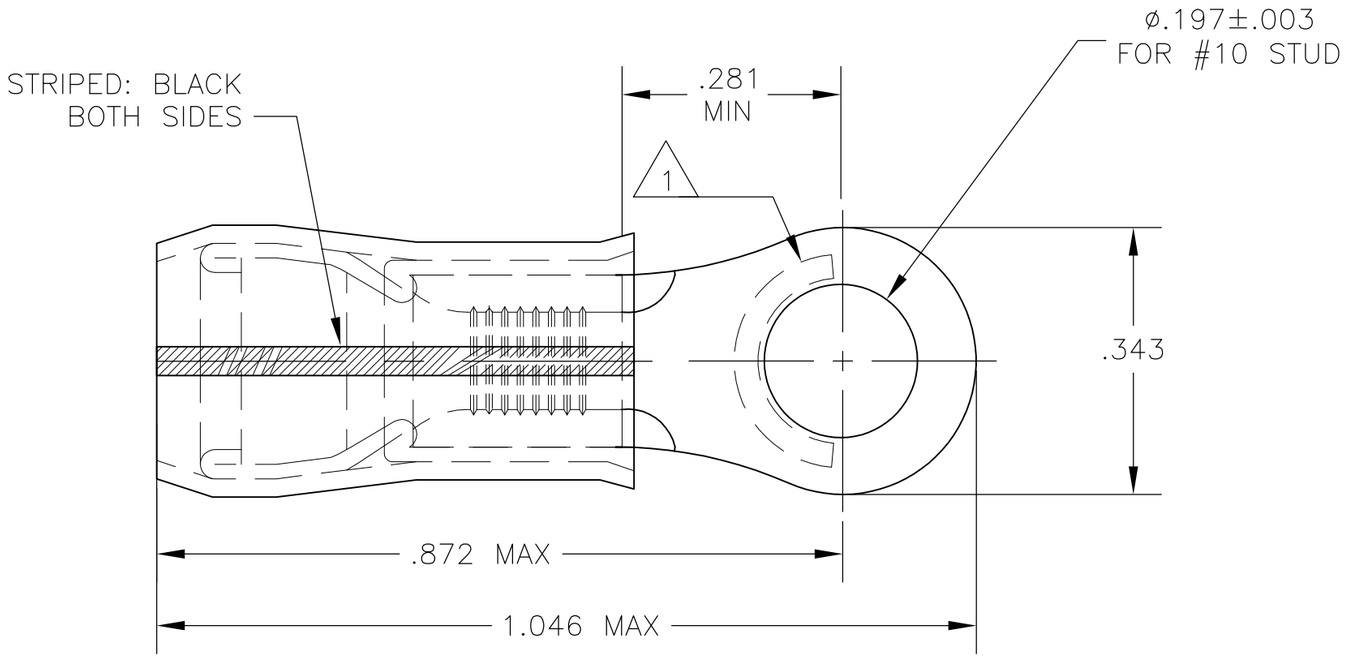

QTY	PACKAGE TYPE	MATERIAL & FINISH	PART NUMBER
PRELIMINARY 2500	TAPE & REEL	BODY & SLEEVE: COPPER PER ASTM B152 TIN LEAD (93-7) PLATE PER ASTM B545 (3% MIN LEAD CONTENT) INSULATION: PVF2, COLOR - NATURAL	2-53983-1
500	LOOSE PIECE		53983-1

THIS DRAWING IS A CONTROLLED DOCUMENT.

DIMENSIONS: INCHES

TOLERANCES UNLESS OTHERWISE SPECIFIED:
0 PLC ± -
1 PLC ± -
2 PLC ± -
3 PLC ± .008
4 PLC ± -
ANGLES ± 5°

MATERIAL -
FINISH -

DWN jr ruth 14SEP04
CHK T MICHIELUTTI 14SEP04
APVD T MICHIELUTTI 14SEP04
PRODUCT SPEC —
APPLICATION SPEC —
WEIGHT —

TE Connectivity

NAME
WIRE TERMINAL
PVF2 - PIDG - RING TONGUE
WIRE SIZE : 16-14 HD

SIZE	CAGE CODE	DRAWING NO	RESTRICTED TO
A3	00779	C-53983	—

CUSTOMER DRAWING | SCALE 5:1 | SHEET 1 OF 1 | REV C2

1470-19 (3/11)