PRODUCT NO.
JSC 97408

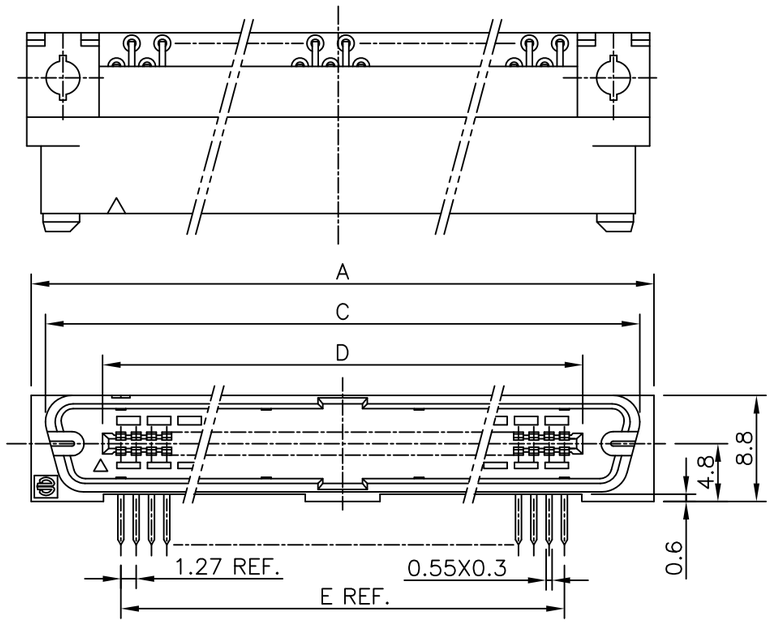

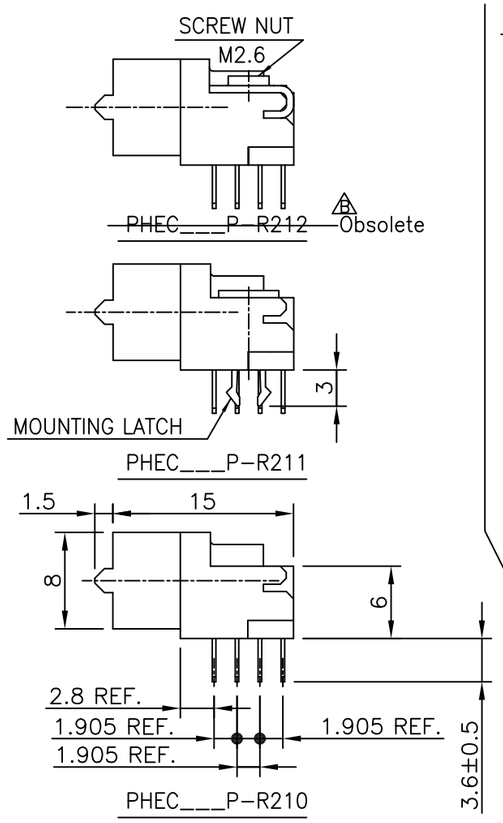

RECOMMENDED PC BOARD
THICKNESS : 1.6 ±0.2
HOLE PATTERN (COMPONENT SIDE)

NO. OF CONTACTS : 40,60,68,80,100,120 (n : NO. OF CONTACTS)

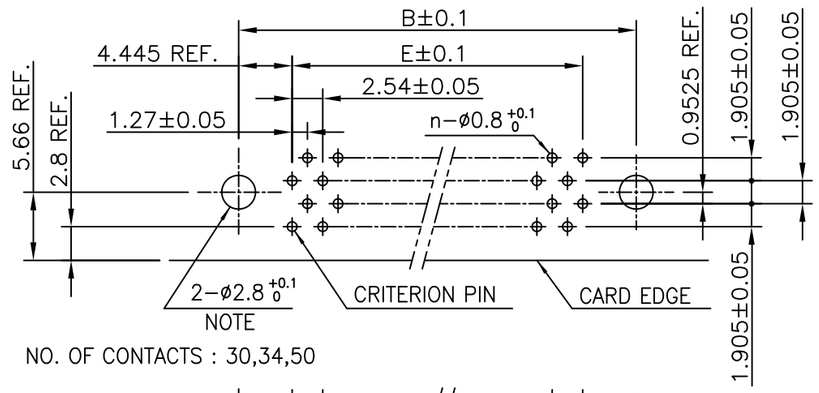

NO. OF CONTACTS : 30,34,50

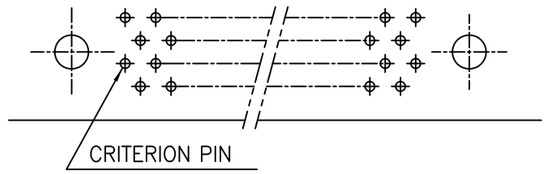

NOTE : THROUGH-HOLES FOR MOUNTING LATCHES ALSO SHOULD BE PLATED.

NO. OF CONTACTS : 40,60,68,80,100,120

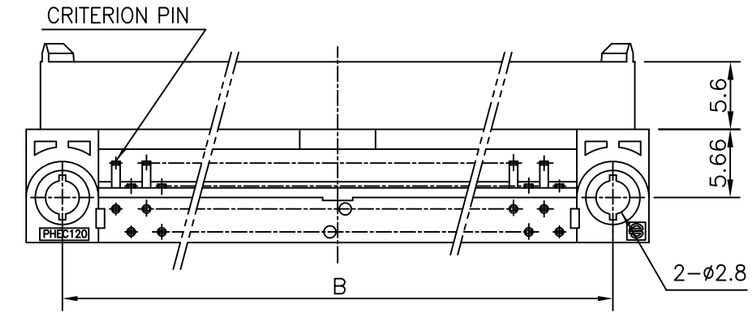

NO. OF CONTACTS : 30,34,50

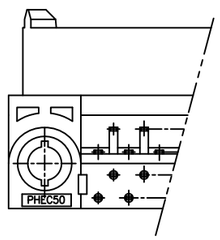

CAT. NO.	NO. OF CONTACTS (MATING SIDE)	DIMENSIONS				
		A	B	C	D	E
PHEC30P-R21_LF	15/ROW X 2 ROWS	32.67	26.67	30.30	20.42	17.78
PHEC34P-R21_LF	17/ROW X 2 ROWS	35.21	29.21	32.84	22.96	20.32
PHEC40P-R21_LF	20/ROW X 2 ROWS	39.02	33.02	36.65	26.77	24.13
PHEC50P-R21_LF	25/ROW X 2 ROWS	45.37	39.37	43.00	33.12	30.48
PHEC60P-R21_LF	30/ROW X 2 ROWS	51.72	45.72	49.35	39.47	36.83
PHEC68P-R21_LF	34/ROW X 2 ROWS	56.80	50.80	54.43	44.55	41.91
PHEC80P-R21_LF	40/ROW X 2 ROWS	64.42	58.42	62.05	52.17	49.53
PHEC100P-R21_LF	50/ROW X 2 ROWS	77.12	71.12	74.75	64.87	62.23
PHEC120P-R21_LF	60/ROW X 2 ROWS	89.82	83.82	87.45	77.57	74.93

NOTES
1. BODY MATERIAL : NYLON GLASS FILLED (UL94V-0), COLOR BLACK
2. TERMINAL MATERIAL : PHOSPHOR BRONZE
3. MOUNTING LATCH MATERIAL : PHOSPHOR BRONZE
4. LOCATOR MATERIAL : PBT GLASS FILLED
5. SCREW NUT : STEEL
6. TERMINAL FINISH
   CONTACT AREA : GOLD 0.25μm min. OVER NICKEL UNDERLAYER
   SOLDER TAILS : PURE Sn 2μm min. OVER NICKEL UNDERLAYER
7. MOUNTING LATCH FINISH : PURE Sn 2μm min. OVER NICKEL UNDERLAYER
8. SCREW FINISH : NICKEL
9. THIS PRODUCT MEETS EUROPEAN UNION DIRECTIVES AND OTHER COUNTRY REGULATIONS AS DESCRIBED IN GS-22-008
10. THE HOUSING WII WITHSTAND EXPOSURE TO 260 DEGREE PEAK TEMPERATURE FOR 10 SECONDS IN A WAVE SOLDER APPLICATION WITH A 1.6mm MINIMUM THICK CIRCUIT BOARD.

ltr	description	ecn no	dr	date
A	RELEASED	J08-0178	S.W	2008-4-18
B	EOL of R212LF	ELX-J-17067	S.W	2014-2-27

mat'l. code ---
surface ISO 1302
tolerance ISO 406 ISO 1101
tolerances unless otherwise specified
angles 0°±2°
linear 0.X ±0.3; 0.XX ±0.3; 0.XXX ±0.3
projection
MM
scale N/A

dr	S.Watanabe	2014-2-27
engr	S.Watanabe	2014-2-27
chr	K.Ito	2014-2-27
appd	Y.Kameda	2014-2-27

product family PHEC
CODE JP
title PRINTED CIRCUIT CONNECTOR (CAT.NO.PHEC _ _ _ P-R21_LF)
dwg no JSC 97408
sheet 1 of 1
size A3
type Customer Drawing
Rev. B

sheet index	revision	B
	sheet	1

FCIconnect.com
Copyright FCI.
form: A3