THIS DRAWING IS UNPUBLISHED. RELEASED FOR PUBLICATION – –, .
© COPYRIGHT – By – ALL RIGHTS RESERVED.

LOC	DIST
FT	0

REVISIONS

P	LTR	DESCRIPTION	DATE	DWN	APVD
	C	REVISED PER ECO–11–020527	12OCT11	KH	MS

MATERIAL:
HOUSING: THERMOPLASTIC, UL94V–0, BLACK.
TERMINAL: M3 THREAD, BRIGHT TIN PLATED, COPPER ALLOY.
SCREWS: M3 THREAD, ZINC PLATED STEEL, EXCEPT WHERE NOTED OTHERWISE.

ELECTRICAL:
RATED CURRENT: 10A.
OPERATING VOLTAGE: 300V.
WIRE RANGE: 16–30 AWG.

MECHANICAL:
PITCH (TERMINAL SPACING): .250"
OPERATING TEMP.: 120°C MAX.

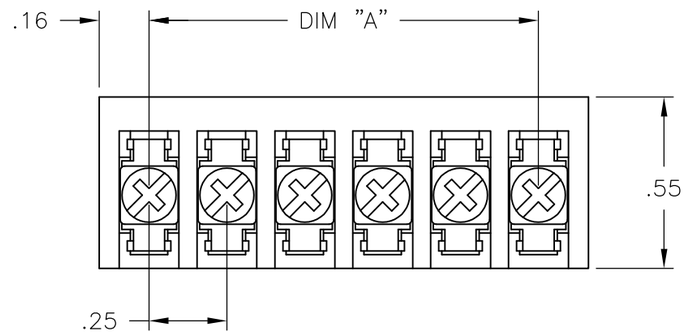

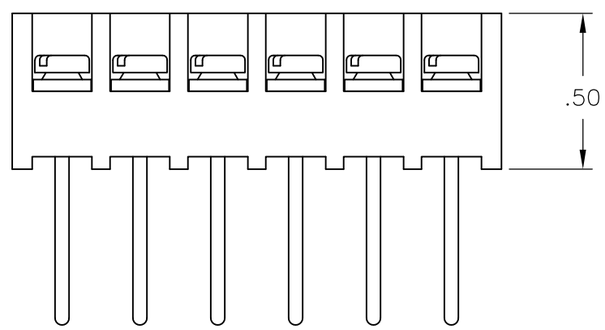

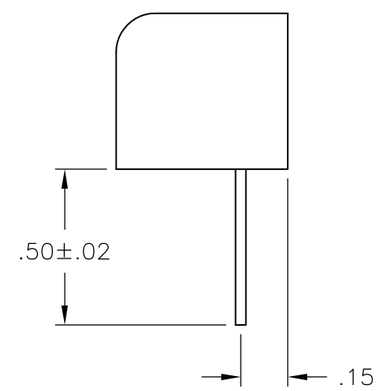

DIM "A"	NO. OF POS.	CATALOG NUMBER	PART NO.
7.25	30	3WWV–30–008	3–1546532–0
7.00	29	3WWV–29–008	2–1546532–9
6.75	28	3WWV–28–008	8–1546119–2
6.50	27	3WWV–27–008	2–1546532–7
6.25	26	3WWV–26–008	2–1546532–6
6.00	25	3WWV–25–008	2–1546532–5
5.75	24	3WWV–24–008	2–1546532–4
5.50	23	3WWV–23–008	2–1546532–3
5.25	22	3WWV–22–008	2–1546532–2
5.00	21	3WWV–21–008	2–1546532–1
4.75	20	3WWV–20–008	8–1546119–0
4.50	19	3WWV–19–008	1–1546532–9
4.25	18	3WWV–18–008	1–1546532–8
4.00	17	3WWV–17–008	1–1546532–7
3.75	16	3WWV–16–008	7–1546119–8
3.50	15	3WWV–15–008	1–1546532–5
3.25	14	3WWV–14–008	1–1546532–4
3.00	13	3WWV–13–008	1–1546532–3
2.75	12	3WWV–12–008	1–1546532–2
2.50	11	3WWV–11–008	1–1546532–1
2.25	10	3WWV–10–008	7–1546119–5
2.00	9	3WWV–09–008	1546532–9
1.75	8	3WWV–08–008	7–1546119–2
1.50	7	3WWV–07–008	1546532–7
1.25	6	3WWV–06–008	7–1546119–0
1.00	5	3WWV–05–008	6–1546119–9
.75	4	3WWV–04–008	6–1546119–7
.50	3	3WWV–03–008	6–1546119–5
.25	2	3WWV–02–008	6–1546119–4

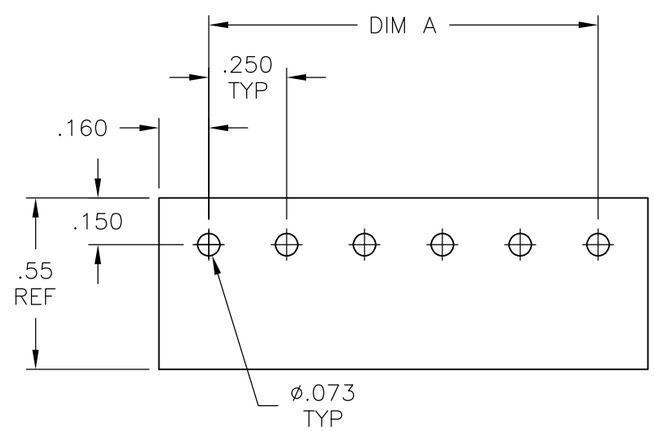

RECOMMENDED PCB LAYOUT

THIS DRAWING IS A CONTROLLED DOCUMENT.

DIMENSIONS: INCHES

TOLERANCES UNLESS OTHERWISE SPECIFIED:
0 PLC ± –
1 PLC ± –
2 PLC ± .02
3 PLC ± .010
4 PLC ± –
ANGLES ± 1°

MATERIAL –
FINISH –

DWN S SCHLEGEL 4/10/03
CHK S YODER 4/10/03
APVD S YODER 4/10/03
PRODUCT SPEC —
APPLICATION SPEC —
WEIGHT —

TE Connectivity

NAME 3WWV–XX–008 ASSEMBLY

SIZE	CAGE CODE	DRAWING NO	RESTRICTED TO
A3	00779	C–6–1546119–5	—

CUSTOMER DRAWING | SCALE NTS | SHEET 1 OF 1 | REV C