THIS DRAWING IS UNPUBLISHED. RELEASED FOR PUBLICATION 20
© COPYRIGHT 20 BY TYCO ELECTRONICS CORPORATION. ALL RIGHTS RESERVED.

LOC	DIST
F	00

REVISIONS

P	LTR	DESCRIPTION	DATE	DWN	APVD
	A	UPDATE	21APR2005	DB	JPP
	B	MISE A JOUR TABLEAU ET CARACTERISTIQUES	10MAR2009	P.B	JPP

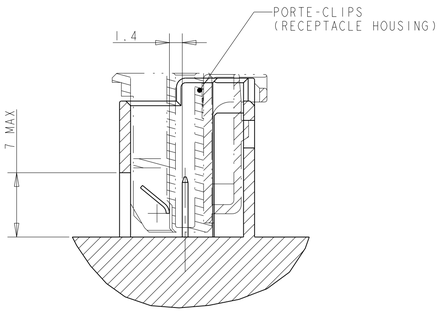

COUPE H-H

POSITION DU SHUNT APRES ACCOUPLEMENT
(POSITION OF SHORT CIRCUIT SPRING AFTER MATING)

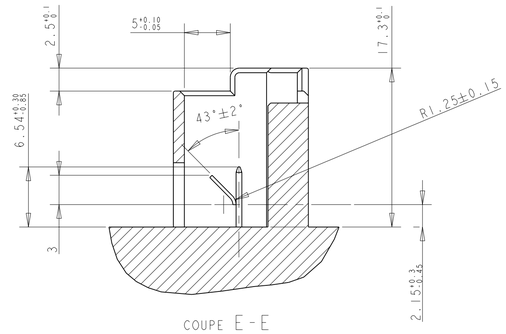

COUPE E-E

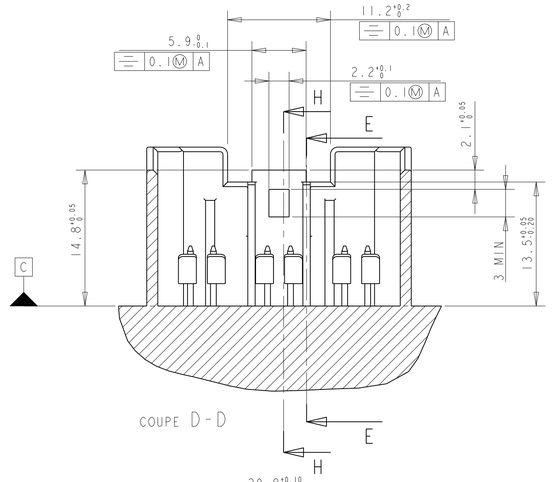

COUPE D-D

COGADE C-E MONTRE
(KEYING C-E AS SHOWN)

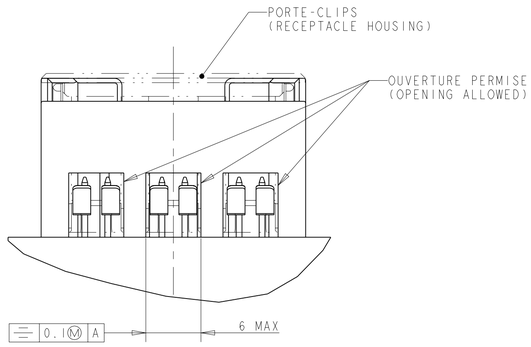

CLASSE D'ENVIRONNEMENT DU PRODUIT :

CLASSE DE TEMPERATURE : 2 (-40 A +100°C)
TEMPERATURE CLASS : SEE ABOVE
CLASSE DE VIBRATION : 1
VIBRATION CLASS : SEE ABOVE
CLASSE D'ETANCHEITE : 0 (NON ETANCHE)

CARACTERISTIQUES MECANIQUES :

FORCE D'ACCOUPLEMENT : < 60N
MATING FORCE : SEE ABOVE
TENUE AXIALES DES LANGUETTES : > 25N
TAB RETENTION : SEE ABOVE
DURETE VICKERS DES LANGUETTES : > 110HV
VICKERS HARDNESS OF TAB : SEE ABOVE
MODULE DE TRACTION : 4000 MPa MINI
TENSILE MODULUS : SEE ABOVE

TRAITEMENT DE SURFACE DES LANGUETTES :

DORURE D'EPAISSEUR MINI : 0.4µm
MINIMUM THICKNESS OF GOLD PLATING : SEE ABOVE

NOTES COMPLEMENTAIRES :

1 NE PAS DEPASSER LE PLAN E
DO NOT RAISE DATUM C

TOUTES LES SPECIFICATIONS NON MENTIONNEES SONT SOUS LA RESPONSABILITE DU REALISATEUR DE L'EMPREINTE
ALL SPECIFICATION NOT INDICATED ARE UNDER CONTROL OF INTERFACE MAKER

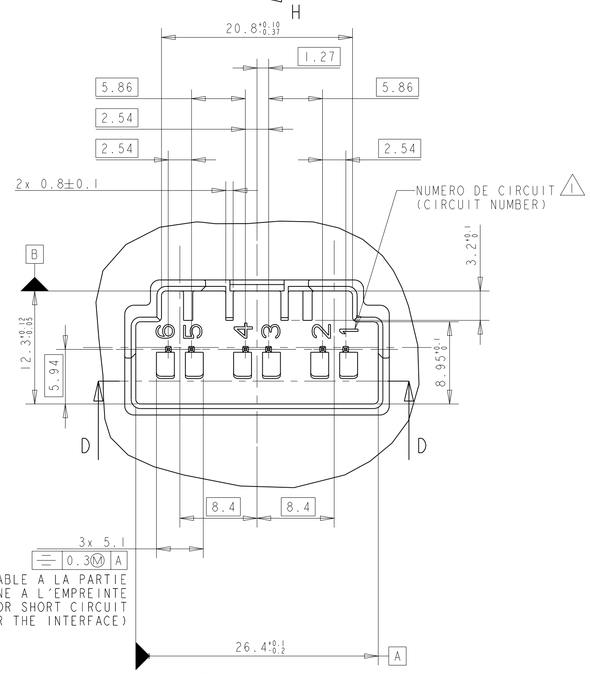

APPLICABLE A LA PARTIE
SHUNT INTERNE A L'EMPREINTE
(APPLICABLE FOR SHORT CIRCUIT
AT INNER THE INTERFACE)

	DIM W	DIM X	DIM Y	DIM Z	COULEUR (COLOR)	RAL
CODAGE A-E (KEYING A-E)	7.2 +0.1 0	18.2 +0.1 -0.3	18.2 +0.1 -0.3	7.2 +0.1 0		
CODAGE A-F (KEYING A-F)	7.2 +0.1 0	18.2 +0.1 -0.3	19.2 +0.1 -0.3	6.2 +0.1 0		
CODAGE A-G (KEYING A-G)	7.2 +0.1 0	18.2 +0.1 -0.3	20.2 +0.1 -0.3	5.2 +0.1 0		
CODAGE A-H (KEYING A-H)	7.2 +0.1 0	18.2 +0.1 -0.3	21.2 +0.1 -0.3	4.2 +0.1 0		
CODAGE B-E (KEYING B-E)	6.2 +0.1 0	19.2 +0.1 -0.3	18.2 +0.1 -0.3	7.2 +0.1 0		
CODAGE B-F (KEYING B-F)	6.2 +0.1 0	19.2 +0.1 -0.3	19.2 +0.1 -0.3	6.2 +0.1 0		
CODAGE B-G (KEYING B-G)	6.2 +0.1 0	19.2 +0.1 -0.3	20.2 +0.1 -0.3	5.2 +0.1 0		
CODAGE B-H (KEYING B-H)	6.2 +0.1 0	19.2 +0.1 -0.3	21.2 +0.1 -0.3	4.2 +0.1 0		
CODAGE C-E (KEYING C-E)	5.2 +0.1 0	20.2 +0.1 -0.3	18.2 +0.1 -0.3	7.2 +0.1 0	JAUNE (YELLOW)	1018
CODAGE C-F (KEYING C-F)	5.2 +0.1 0	20.2 +0.1 -0.3	19.2 +0.1 -0.3	6.2 +0.1 0	ROUGE (RED)	3020
CODAGE C-G (KEYING C-G)	5.2 +0.1 0	20.2 +0.1 -0.3	20.2 +0.1 -0.3	5.2 +0.1 0	NATUREL (NATURAL)	-
CODAGE C-H (KEYING C-H)	5.2 +0.1 0	20.2 +0.1 -0.3	21.2 +0.1 -0.3	4.2 +0.1 0		
CODAGE D-E (KEYING D-E)	4.2 +0.1 0	21.2 +0.1 -0.3	18.2 +0.1 -0.3	7.2 +0.1 0		
CODAGE D-F (KEYING D-F)	4.2 +0.1 0	21.2 +0.1 -0.3	19.2 +0.1 -0.3	6.2 +0.1 0		
CODAGE D-G (KEYING D-G)	4.2 +0.1 0	21.2 +0.1 -0.3	20.2 +0.1 -0.3	5.2 +0.1 0		
CODAGE D-H (KEYING D-H)	4.2 +0.1 0	21.2 +0.1 -0.3	21.2 +0.1 -0.3	4.2 +0.1 0		

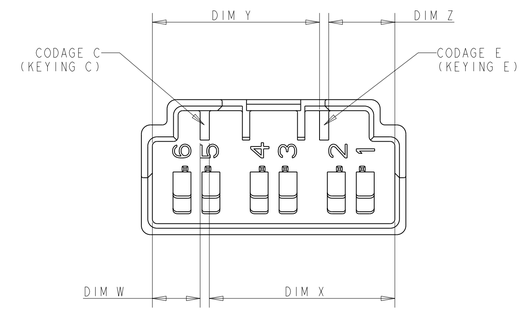

DETAIL DES LANGUETTES
(TAB DETAIL)

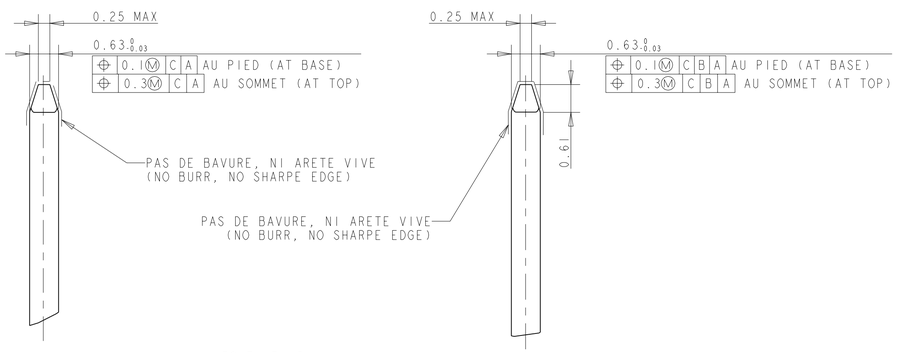

ECHELLE 15:1

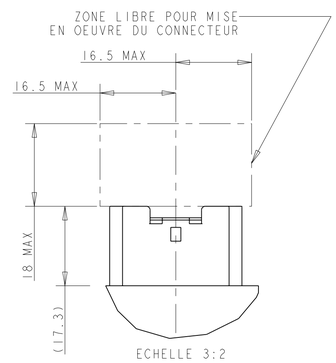

ECHELLE 3:2

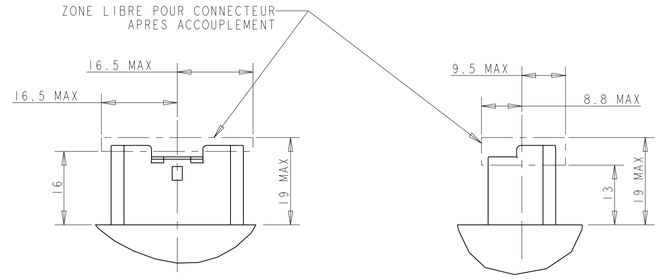

ECHELLE 3:2

THIS DRAWING IS A CONTROLLED DOCUMENT FOR TYCO ELECTRONICS CORPORATION. IT IS SUBJECT TO CHANGE. FOR THE LATEST REVISION, THE ORGANIZATION SHOULD BE CONTACTED FOR THE LATEST REVISION.

DIMENSIONS: mm

TOLERANCES UNLESS OTHERWISE SPECIFIED:
0 PLC ±
1 PLC ±
2 PLC ±0.13
3 PLC ±
4 PLC ±
ANGLES ±1°

MATERIAL - -
FINISH - -

DWN	D. BANCE	26NOV2002
CHK	JP. PICAUD	27NOV2002
APVD	JJ. REVIL	27NOV2002

PRODUCT SPEC -
APPLICATION SPEC -
WEIGHT -

CUSTOMER DRAWING

tyco Electronics
TYCO ELECTRONICS France SAS
BP 39, 95301 CERGY-PONTOISE Cedex

NAME: 6 WAY ELO INTERFACE
INTERFACE 6 VOIES ELO

SIZE	CAGE CODE	DRAWING NO	RESTRICTED TO
A1	00779	C-1379791	-

SCALE 2:1 SHEET 1 OF 1 REV B