Alle Rechte vorbehalten/ *All rights reserved*

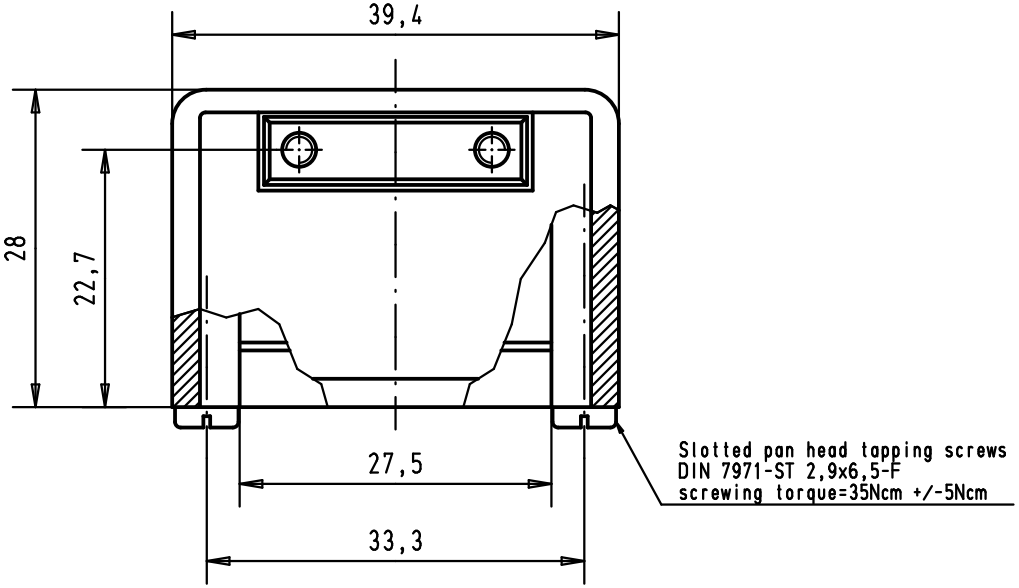

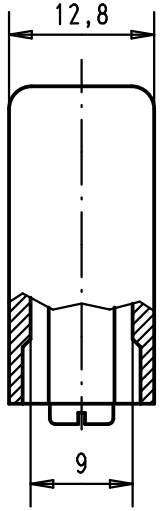

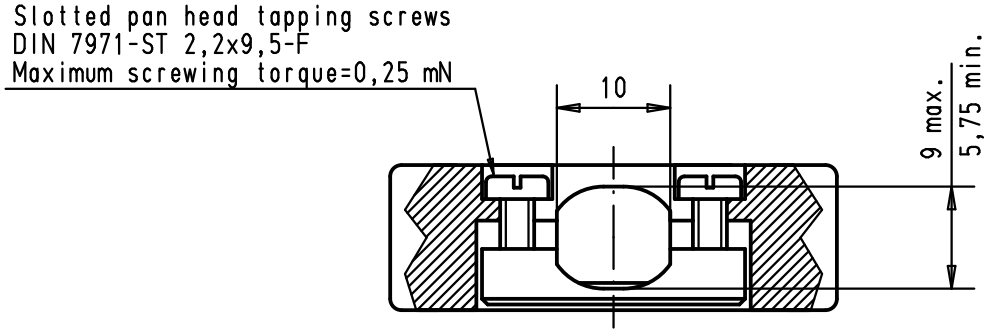

09 67 015 0413	Thermoplastic metallized	EC03223	25-MAY-11	SD
09 67 015 0411	Thermoplastic grey RAL 7032	29760	28-MAR-02	CV
Part number	Material	Mod.	Dat.	Name

	Dat.	Name
Detail.	28-MAR-02	CV
Insp.	25-MAY-11	JMDV
Stand.		

All Dim. in mm
Orig. Size DIN A 4

HARTING EURL
F-95972 Paris

D-Sub, Hood 15 poles, for spring or slide locking, top cable entry

Maßstab/ *Scale* 1.5:1

TB 0967015041x

Sub.

Blatt/ *Page* 1/