THIS DRAWING IS UNPUBLISHED. RELEASED FOR PUBLICATION OCT ,1978.
© COPYRIGHT 1978 BY TYCO ELECTRONICS CORPORATION. ALL RIGHTS RESERVED.

LOC	DIST
J	—

REVISIONS

P	LTR	DESCRIPTION	DATE	DWN	APVD
	A	RELEASED ECR-05-009552	15AUG05	C.Z	S.Y

-2; AS SHOWN

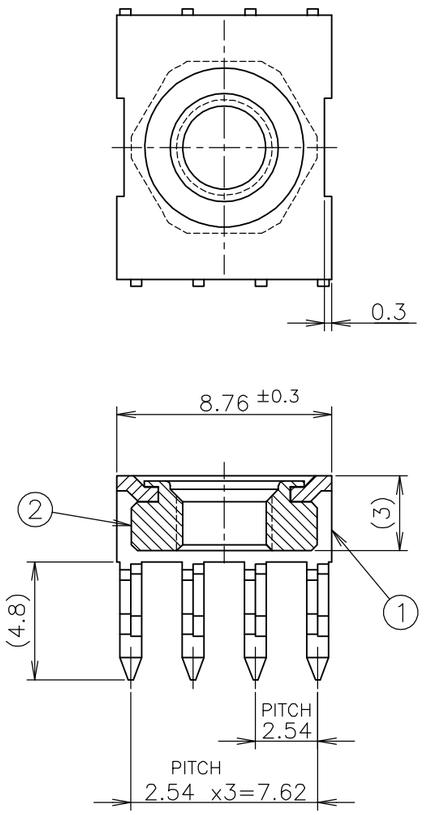

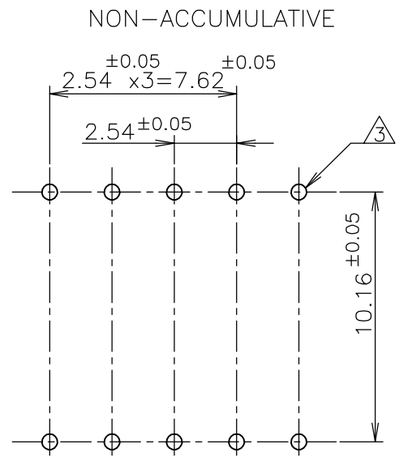

RECOMMENDED PCB LAYOUT

(SEE NOTE 2)

NOTES:
1. USE SCREW AND SPRING WASHER AS FOLLOWING:
   M4 SCREW
   SPRING WASHER: NOMINAL DIAMERER4.
2. RECOMMENDED PCB LAYOUT(USED BY ACTION-PIN)
   a. PCB MATERIAL: GLASS EPOXY
      NEMA GIO, GII, FR4
   b. PCB THICKNESS: 1.5MIN.
   c. THRU HOLE TREATMENT: ø1.0 ±0.025
   d. COPPER FOIL THICKNESS: 25~75u
   e. COPPER FOIL HARDNESS: 150KNoopMAX.
   f. FINISH DIAMETER: ø0.9 ±0.05 (AFTER PL.)
3. IF IT IS USED BY SOLDERING,
   THRU HOLE DIAMETER: ø1.30 +0.05 -0.1 (8 POSITIONS)

NAME	ITEM
M4 CURLING NUT	2
8P POWER TAP CONTACT	1

THIS DRAWING IS A CONTROLLED DOCUMENT.

GENERAL TOLERANCE
10 ≧ : ±0.2
30 ≧ > 10: ±0.25
100 ≧ > 30: ±0.3
ANGLES: ±3°

DIMENSIONS: mm

TOLERANCES UNLESS OTHERWISE SPECIFIED:
0 PLC ± –
1 PLC ± –
2 PLC ± –
3 PLC ± –
4 PLC ± –
ANGLES ± –

MATERIAL: COPPER ALLOY
FINISH: TIN PL.

DWN	C.ZHU	15AUG05
CHK	I.WANG	15AUG05
APVD	S.YAO	15AUG05
PRODUCT SPEC		
APPLICATION SPEC		
WEIGHT		

CUSTOMER DRAWING

tyco Electronics
Tyco Electronics AMP K.K.
Kawasaki, Japan

NAME: 8POS AMP POWER TAP CONNECTOR

SIZE	CAGE CODE	DRAWING NO	RESTRICTED TO
A3	00779	C-5174882	—

SCALE	SHEET	REV
4:1	1 OF 1	A