Jan.1.2022 Copyright 2022 HIROSE ELECTRIC CO., LTD. All Rights Reserved.
In case of consideration for using Automotive equipment / device which demand high reliability, kindly contact our sales window correspondents.

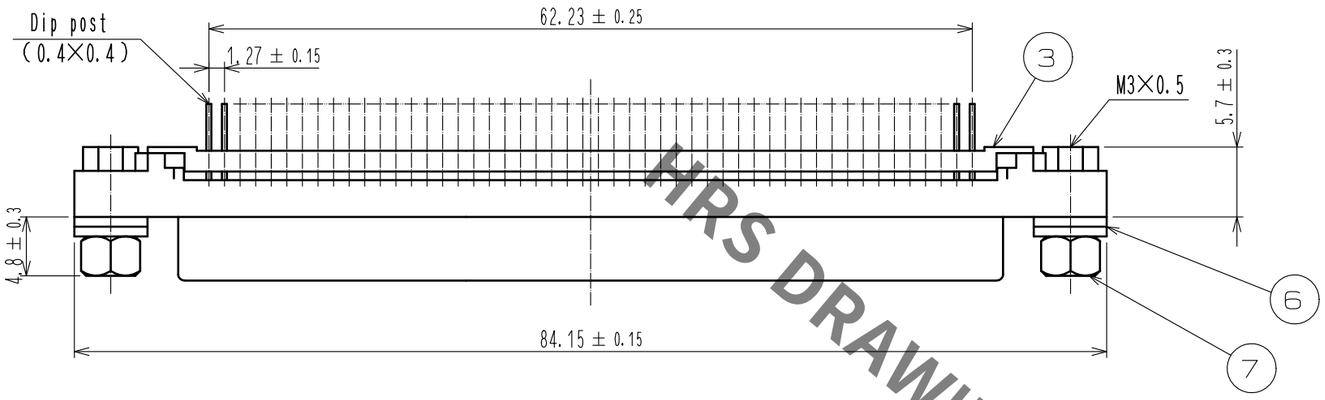

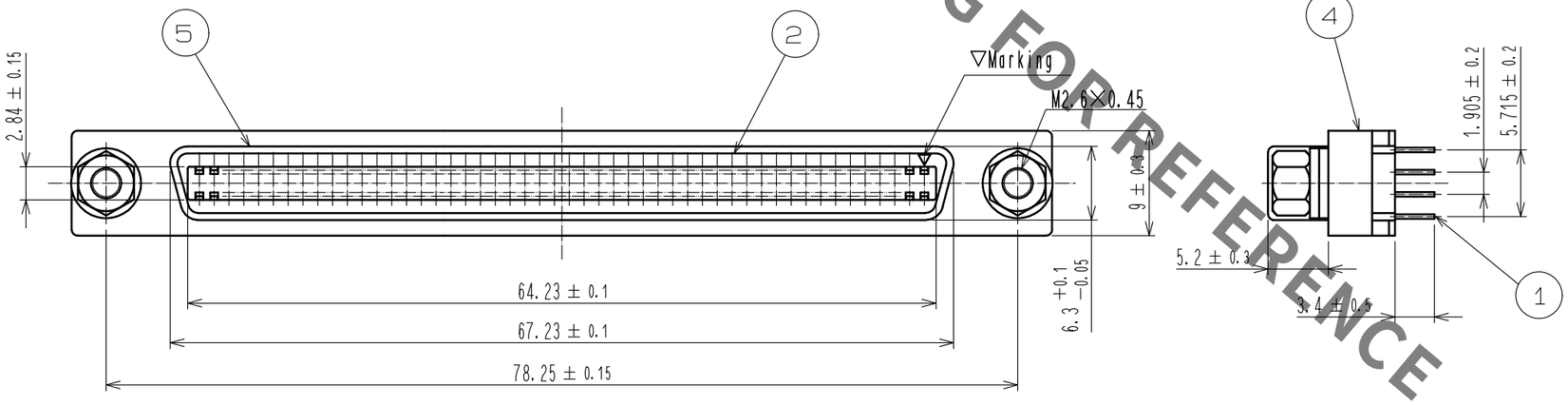

PC board pattern(1:1)

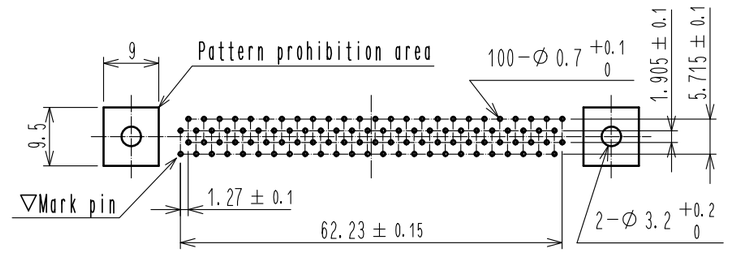

Panel cutout(1:1)
(Panel thickness shall be 2mm max)

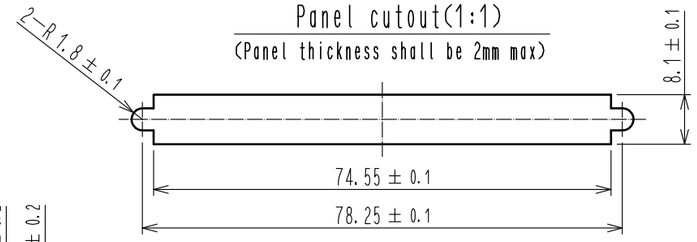

Notes 1 Adjust the number of washers according to the conformity panel thickness.

Panel thickness	Number of washer
0 ~ t = 0.4	2
t = 0.8 ~ 1.2	1
t = 1.6 ~ 2.0	0

2 Contact area : Gold plating 0.76μm min
Lead area : Gold plating 0.03μm min
Under : Nickel plating 2μm min

NO.	MATERIAL	FINISH , REMARKS	NO.	MATERIAL	FINISH , REMARKS
4	Zinc alloy die casting	Over : Nickel plating 2μm min Under : Copper plating 10μm min			
3	PBT	Black , UL94V-0	7	Brass	Over : Nickel plating 2μm min Under : Copper plating 1μm min
2	PBT	Black , UL94V-0	6	Steel	Over : Nickel plating 2μm min Under : Copper plating 3μm min
1	Phosphor bronze	2	5	Steel	Over : Nickel plating 1μm min Under : Copper plating 5μm min

UNITS	SCALE	COUNT	DESCRIPTION OF REVISIONS	DESIGNED	CHECKED	DATE
mm	2 : 1	0				

HRS HIROSE ELECTRIC CO., LTD.

APPROVED	: AH. KODAMA	18. 06. 11	DRAWING NO.	EDC-041447-57-04
CHECKED	: AH. KODAMA	18. 06. 11	PART NO.	DX20BM-100S(57)
DESIGNED	: MO. SHIMOYAMA	18. 06. 11	CODE NO.	CL230-5022-9-57
DRAWN	: SJ. SATO	18. 06. 11		0 1/1

HRS DRAWING FOR REFERENCE