C TJSS-108HC

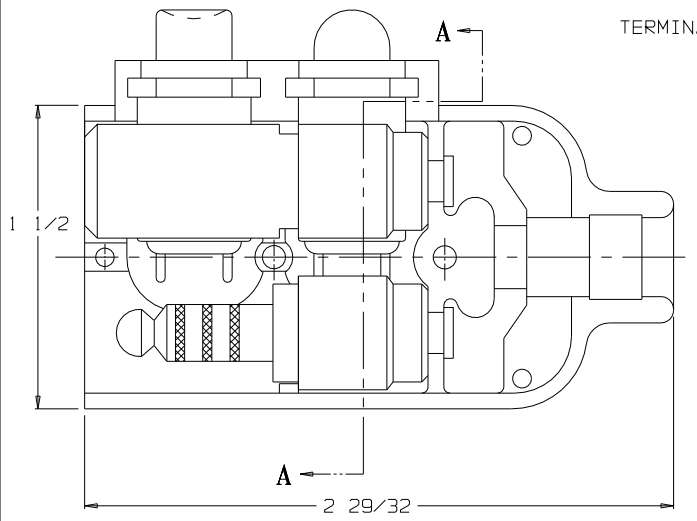

VIEW WITH HALF SHELL REMOVED

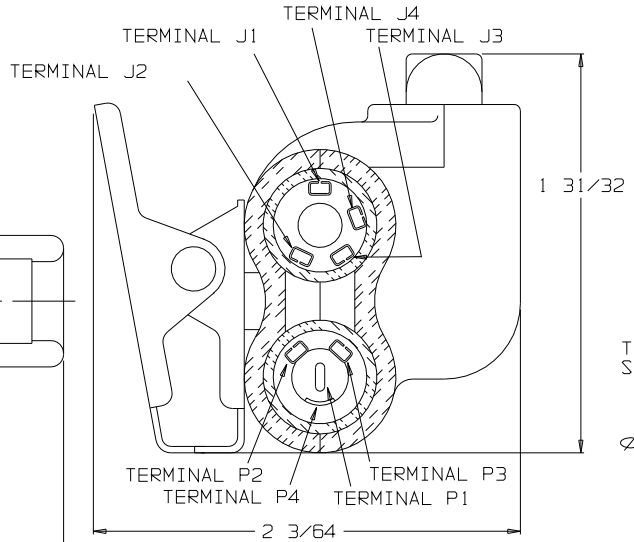

SECTION A-A

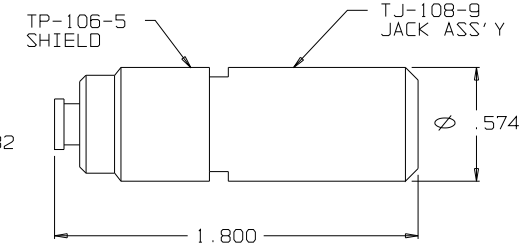

JACK & SHIELD ASSEMBLY
TJ-108-10

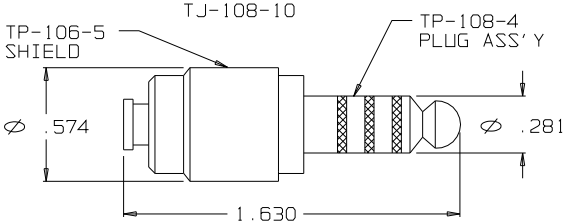

PLUG & SHIELD ASSEMBLY
TP-108-6

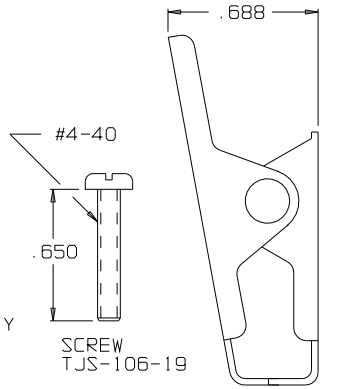

SCREW
TJS-106-19

CLIP ASSY
TJS-104-3A

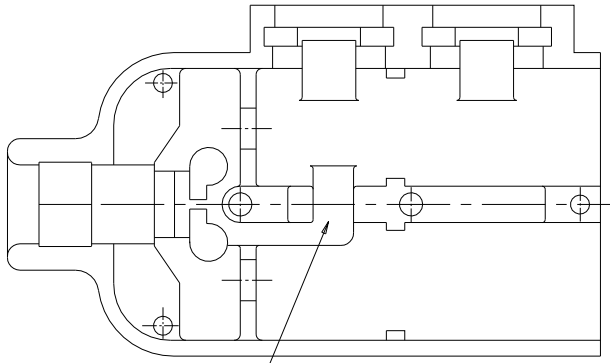

CHANNEL FOR SWITCH LEADS

SHELL, HALF TJSS-106-2HC

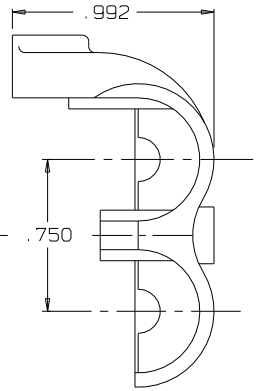

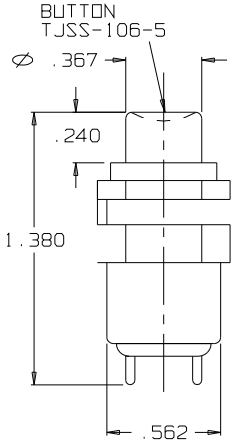

SWITCH
SPNO

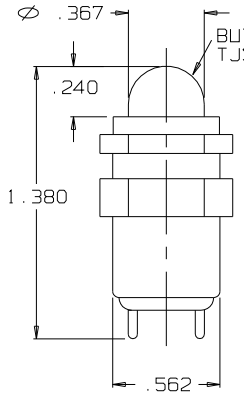

SWITCH
SPNO

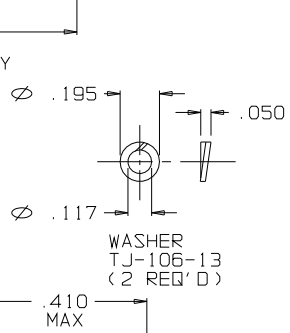

WASHER
TJ-106-13
(2 REQ'D)

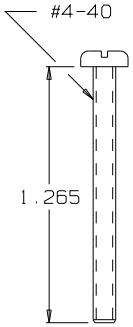

SCREW
TJSS-106-3

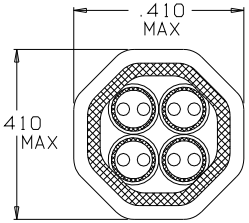

SECTION B-B

STRAIN RELIEF
CLAMP TJSS-106-12
AFTER CRIMPING
B USE DANIELS HX4 CRIMP
TOOL AND Y146 DIE SET
SCALE 4:1

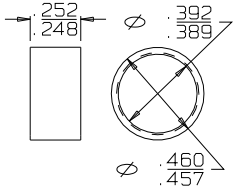

RING, STRAIN RELIEF
TJSS-106-12

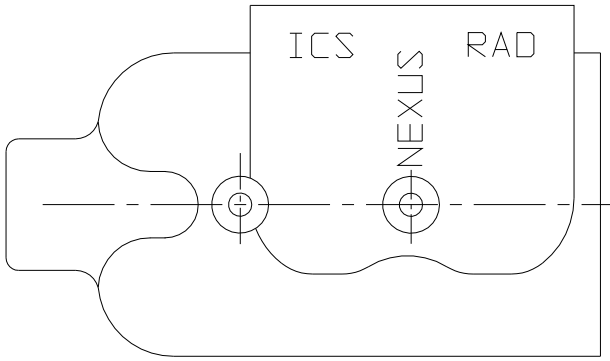

SHELL, HALF TJSS-108HC-1

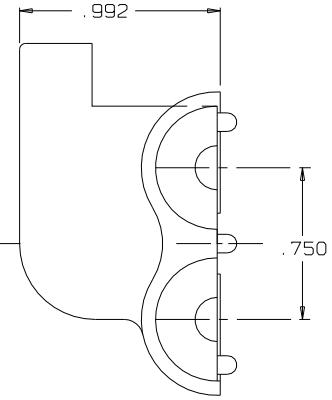

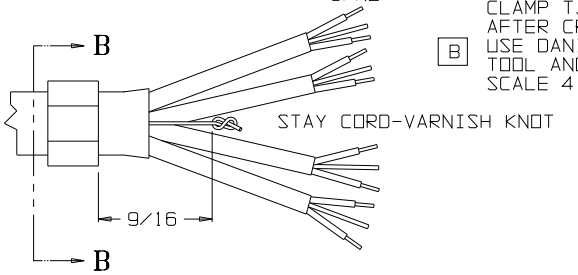

THIS DOCUMENT CONTAINS PROPRIETARY INFORMATION OF NEXUS, INCORPORATED AND SUCH INFORMATION MAY NOT BE DISCLOSED TO OTHERS FOR ANY PURPOSE OR USED FOR ANY PURPOSE WITHOUT THE WRITTEN CONSENT OF NEXUS.

LET.	REVISION	CN #	DATE	CHK.
B	ADD DANIELS HX4 CRIMP TOOL AND Y146 DIE SET	026	9/16/09	GPH
A	1) WAS TJSS-106-1HC	0509	3/29/06	EWT

DWN. BY EWT	DATE 3/29/06	MATERIAL ———	
CHECKED BY EWT	DATE 3/29/06	FINISH ———	
APPR. BY EWT	DATE 3/29/06	WEIGHT ———	SCALE NONE
UNLESS OTHERWISE SPECIFIED DIMENSIONS ARE IN INCHES TOLERANCES ON FRACTIONS DECIMALS ANGLES +/- 1/64 +/-.005 —		TITLE JACK-TELEPHONE-BIAXIAL SHIELDED (8) CONDUCTOR WITH TWO SWITCHS	
		DO NOT SCALE DWG.	SHEET 1 OF 1

NEXUS
STAMFORD, CONN

SIZE C DWG. NO. TJSS-108HC