MICRO SWITCH
FREEPORT ILLINOIS U.S.A.
A DIVISION OF HONEYWELL
FED. MFG. CODE 91929

SWITCH - ENCLOSED

CATALOG LISTING
1EN356-RB

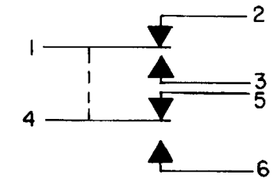

CIRCUIT DIAGRAM

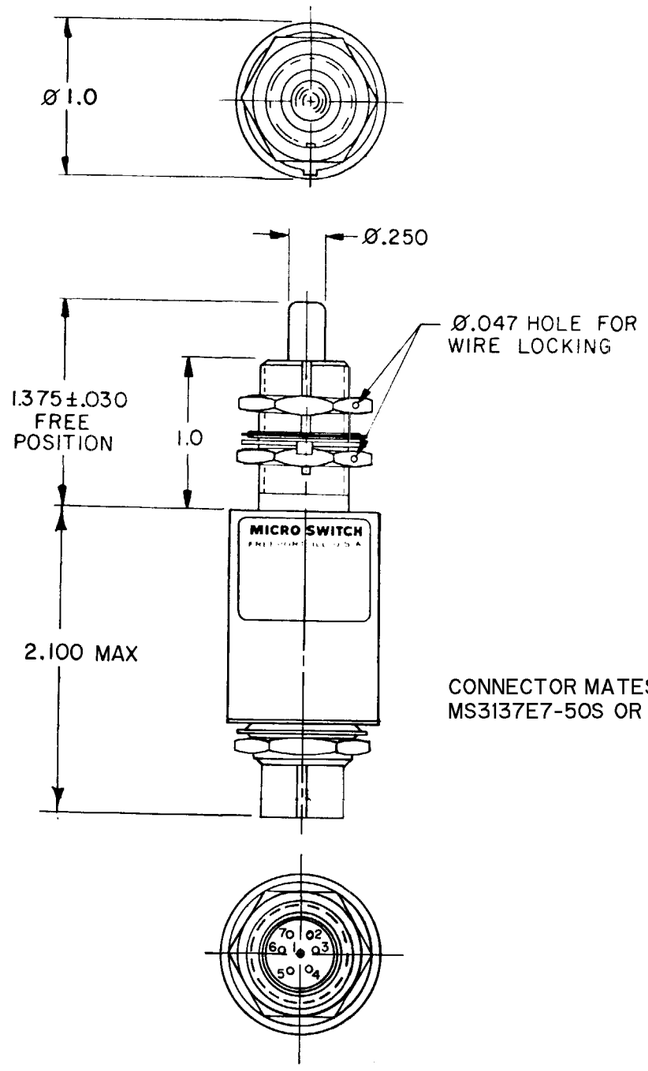

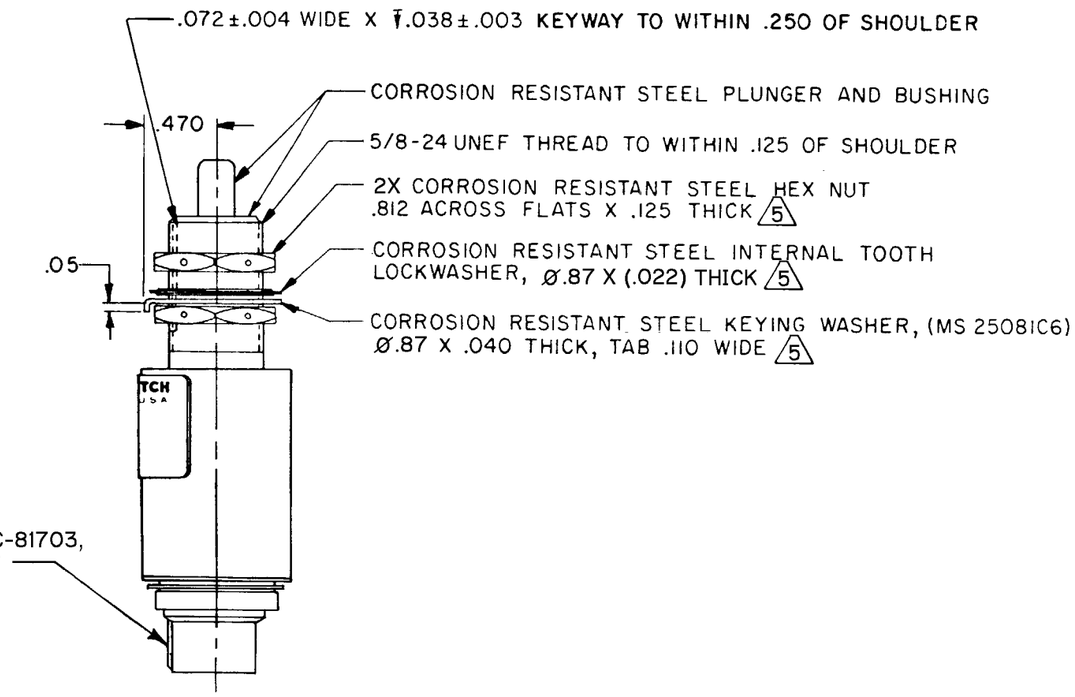

NOTES
1 - CORROSION RESISTANT STEEL ENCLOSURE
2 - SWITCH SEALED PER MIL-PRF-8805 SYMBOL 4
3 - CIRCUIT DIAGRAM, DATE CODE, FED. MFG. CODE AND CATALOG LISTING ARE SHOWN ON NAMEPLATE
4 - COINCIDENCE OF OPERATING AND RELEASING POINTS: .010 OF PLUNGER TRAVEL
5 HARDWARE MAY BE PACKAGED UNASSEMBLED PER MIL-PRF-8805

THIS DRAWING COVERS A PROPRIETARY ITEM AND IS THE PROPERTY OF MICRO SWITCH, A DIVISION OF HONEYWELL. THIS DRAWING IS NOT TO BE COPIED OR USED WITHOUT THE APPROVAL OF MICRO SWITCH.

THIRD ANGLE PROJECTION

SCALE FULL

DO NOT SCALE PRINT

TOLERANCES
ARE IN DESIGN UNITS. CONVERSIONS ARE ONLY FOR REFERENCE. UNLESS NOTED TOLERANCES ARE ±

	DIM. mm	TOL. mm/in	DIM. in	TOL. mm/in
NO PLACES	X	1/34		
ONE PLACE	X.X	0.41/.016	X.X	0.8/.03
TWO PLACES	X.XX	0.15/.006	X.XX	0.38/.015
THREE PLACES UNLESS			X.XXX	0.13/.005

SI METRIC
US CUSTOMARY
DESIGN UNITS ☐ ☒

RAW MATERIAL-COMMERCIAL STANDARD
MICRO SWITCH STANDARDS APPLY
DIMENSIONS ARE TO BE MET BEFORE PROTECTIVE COATINGS ARE APPLIED

WEIGHT 5.0 OZ MAX

ANSI Y14.5M-1982 APPLIES

CHARACTERISTICS	
OPERATING FORCE	6-12 LB
FULL OVERTRAVEL FORCE	30 LB MAX
RELEASE FORCE	4 LB MIN
PRETRAVEL	.040 MAX
DIFFERENTIAL TRAVEL	.020 MAX
OVERTRAVEL	.250 MIN

ELECTRICAL DATA

CONTACT ARRANGEMENT
2X S P D T

LOAD	28 VDC	
	SEA LEVEL	50,000 FT.
RES	4	4
IND	2	2
MOTOR	4	

CATALOG LISTING 1EN356-RB
PAGE 1 OF 1
RELEASE NO. PR-7311
REPLACES
ISSUE M 6
CHECK
REVISIONS
A C044351 WJM 20 JUN 79
B C047573 J A P 5 AUG 80
C C080689 J A S 25 JUN 98
D CO-93970 S A V 14 JAN 99
E 200913 DLT 04 AUG 00
CHECK
27 JUNE 79 GLH
CHECK
DRAWN 20 JUN 79 WJM
FORMTEK