May.1.2019 Copyright 2019 HIROSE ELECTRIC CO., LTD. All Rights Reserved.
In case of consideration for using Automotive equipment / device which demand high reliability, kindly contact our sales window correspondents.

	COUNT	DESCRIPTION OF REVISIONS	BY	CHKD	DATE		COUNT	DESCRIPTION OF REVISIONS	BY	CHKD	DATE
△					. .	△					. .
△					. .	△					. .
△					. .	△					. .

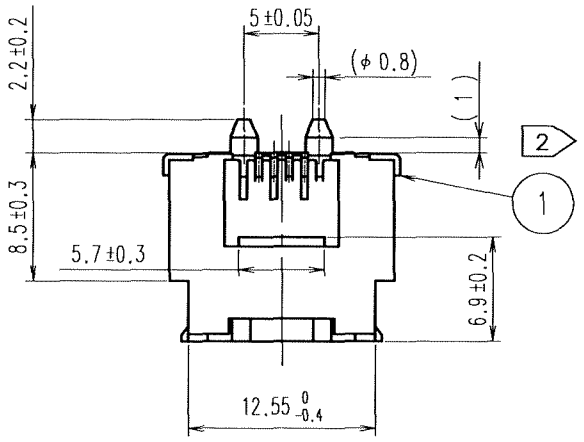

B(4:1)

REFERENCE

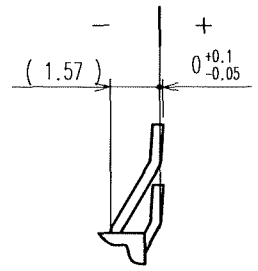

RECOMMENDED PC BOAD PATTERN(TOP VIEW)

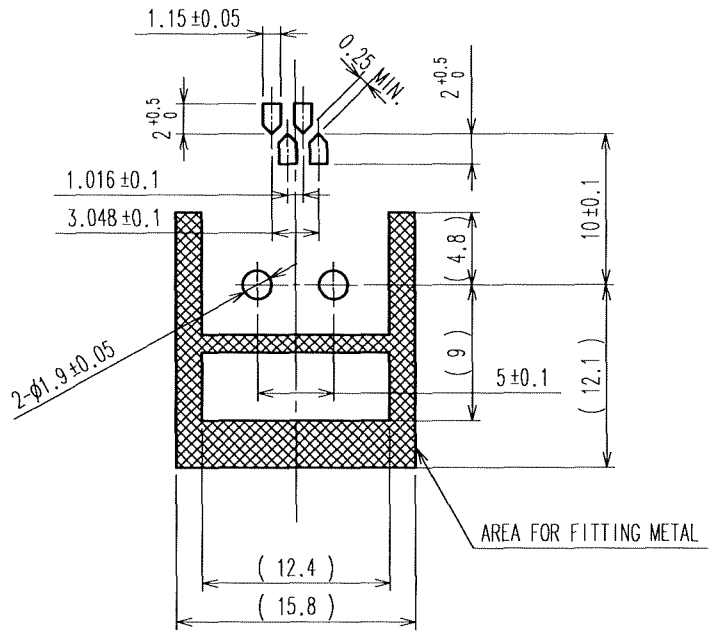

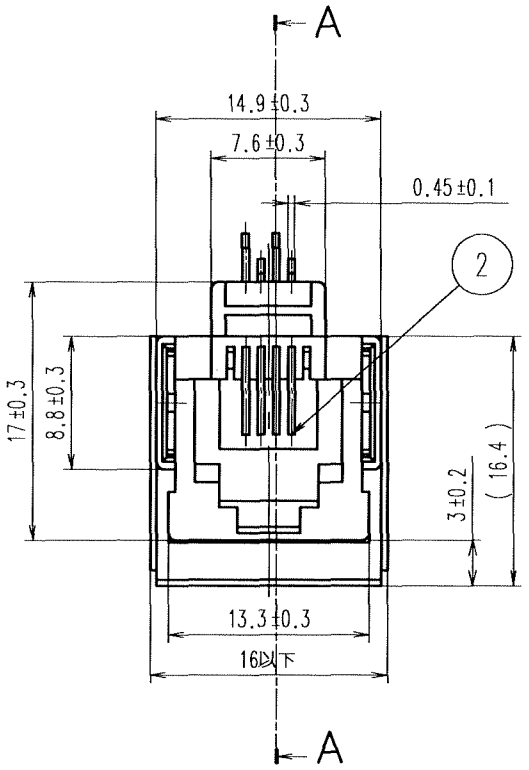

REFERENCE

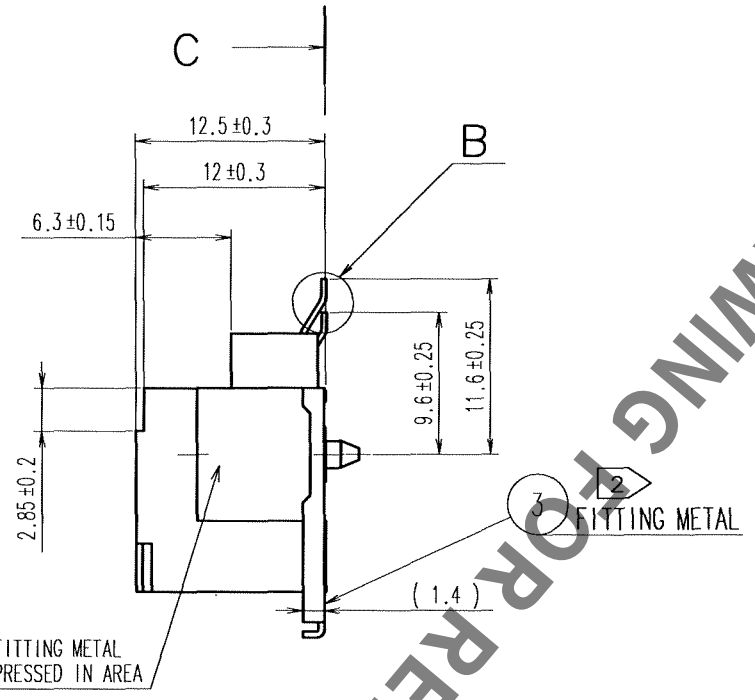

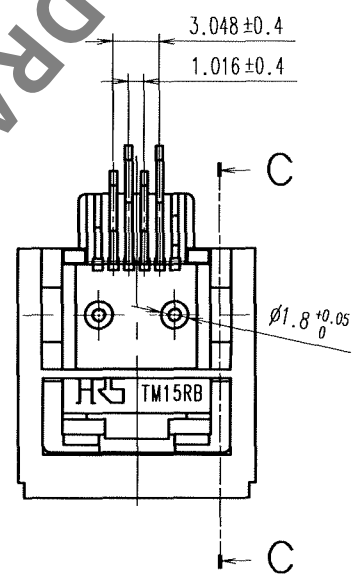

HRS DRAWING FOR REFERENCE

NOTES. 1 NICKEL PLATED OTTHER THAN GOLD.
2 RETENTION FORCE BETWEEN NO. ① AND NO. ③ SHALL BE 98N MIN.

C-C(4:1)

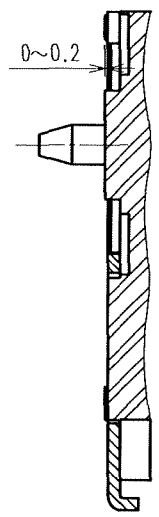

A-A

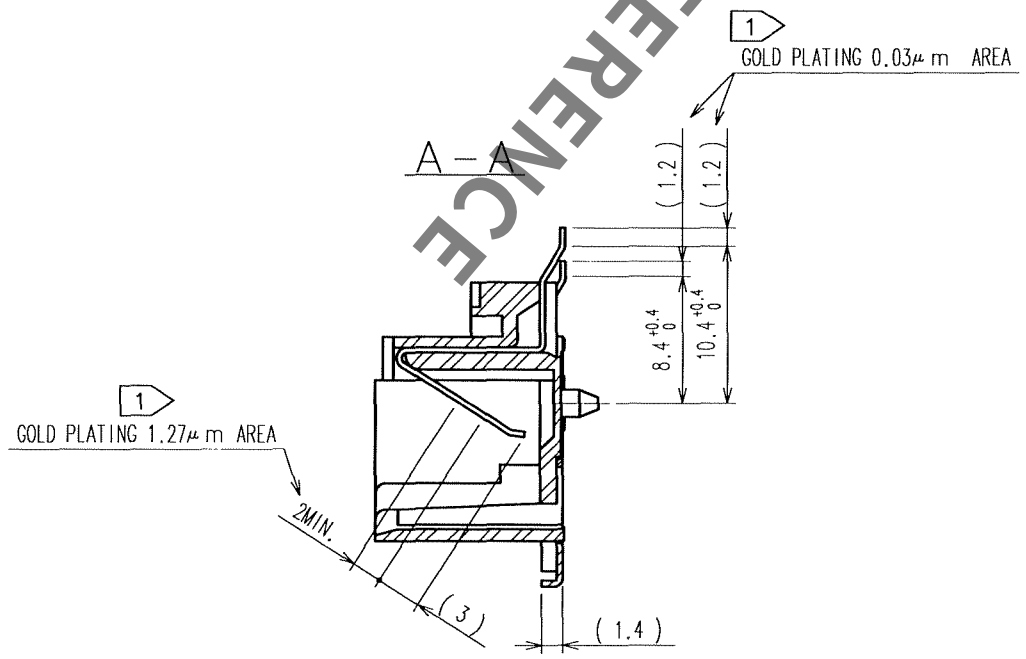

NO.	MATERIAL	FINISH, REMARKS	NO.	MATERIAL	FINISH, REMARKS
2	PHOSPHOR BRONZE	1 CONTACT AREA:GOLD PLATING 1.27μm ON BOAD SIDE:OLD PLATING 0.03μm	3	BRASS (PLATED MATERIAL)	TIN PLATING 1μm
1	POLYAMIDE	(BLACK) UL94V-0			

CODE NO.(OLD)	DRAWN	DESIGNED	CHECKED	APPROVED	RELEASED
	T. Watanabe '05.11.29	T. Watanabe '05.11.29	H. Miura '05.11.30	H. Miura '05.11.30	. .

SCALE 2 : 1	DRAWING NO. EDC3-120690-01	PART NO. TM15RB-64(50)
UNITS mm	HRS HIROSE ELECTRIC CO., LTD	CODE NO. CL222-2784-7-50 1/1

TO
Q