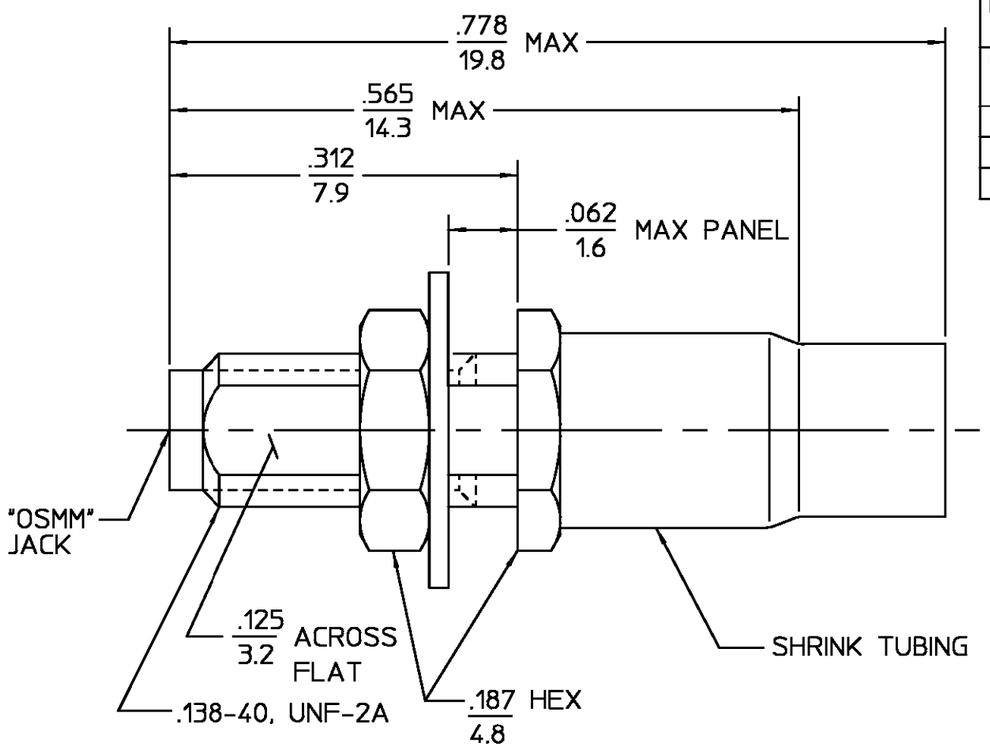

DESIGNED FOR USE WITH RG-196/U CABLE	
CABLE ENTRY DIAMETER MINIMUM	
FERRULE	.099
HOUSING	.036
CONTACT	.012

REVISIONS

REV	DESCRIPTION	DATE	APPROVED
02_2	REVISED	7/13/97	

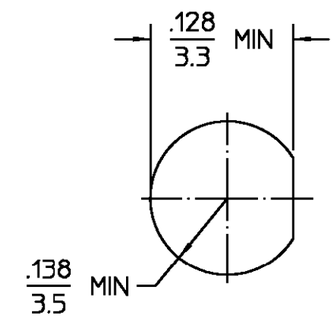

RECOMMENDED MOUNTING HOLE

ELECTRICAL	MECHANICAL	ENVIRONMENTAL
Nominal Impedance (Ohms) 50	Interface Dimensions Per M/A-Com Catalog	Vibration MIL-STD-202, Method 204, Condition D
Frequency Range (GHz) DC to 18.0	Recommended Mating Torque 2 In-Lbs	Shock MIL-STD-202, Method 213, Condition I
VSWR 1.15 +.01f(GHz)	Mating Characteristics:	Thermal Shock MIL-STD-202, Method 107, Condition B, Except High Temp 200°C
Insertion Loss (dB MAX) .08 $\sqrt{f(GHz)}$	Insertion (MAX Lbs) 3.0	Moisture Resistance MIL-STD-202, Method 106
RF Leakage (dB MIN) -(100-f(GHz))	Withdrawal (MIN Oz) 0.5	Corrosion - MIL-STD-202, Method 101, Condition B, 5% salt spray
Corona, 70,000 Ft (VRMS MIN) 150	Force to Engage and Disengage (In-Lbs MAX) 1.0	
Dielectric Withstanding Voltage (VRMS MIN) @ Sea Level 500	Center Contact Captivation	
Contact Resistance (Milliohms MAX)	Axial (Lbs) N/A	
Center Contact 3.5	Radial (In-Oz) N/A	
Outer Contact 2.8	Cable Retention	
RF High Potential @ Sea Level (VRMS MIN @ 5 MHz) 375	Axial Force (Lbs) 10	
I.R.(Megohms MIN) 5,000	Torque (In-Oz) N/A	
	Weight (Grams) TBD	

.XXX = in
XX.X = mm (REF)

COMPONENT	MATERIAL	FINISH
HOUSING MOUNTING NUT LOCKWASHER	STAINLESS STEEL PER ASTM-A484 AND ASTM-A582, TYPE 303	GOLD PLATE PER MIL-G-45204
DIELECTRIC	PTFE FLUOROCARBON PER ASTM-D-1457	N/A
CENTER CONTACT	BERYLLIUM COPPER PER ASTM-B-196 OR ASTM-B-197, ALLOY C17300, CONDITION H	GOLD PLATE PER MIL-G-45204
SHRINK TUBING	HEAT SHRINKABLE POLYOLEFIN COMPOUND MIL-I-23053/4	N/A
FERRULE	COPPER OR BRASS ALLOY ROCKWELL F65 MAXIMUM	GOLD PLATE PER MIL-G-45204

UNLESS OTHERWISE SPECIFIED DIMENSIONS ARE IN INCHES

FRAC.	DEC.	ANGLES
± 1/64	±.005	± 1°

		DATE
DRAWN BY	EJC	8/31/71
CHECKED BY	PRB	8/31/71
APP'D BY	BWC	8/31/71

AMP

AMP Incorporated
140 Fourth Avenue
Waltham, MA 02451-7599

These drawings and specifications are the property of M/A COM Interconnect Div. and shall not be reproduced or copied or used in whole or in part as the basis for the manufacture or sale o f item(s) without written permission.

USE ASS'Y PROCEDURE

NO. A.P. 40-005
408-08253

TITLE "OSMM" STRAIGHT CABLE JACK - CRIMP ATTACHMENT

SIZE	CODE IDENT NO.		REV
B	26805	4034-7196-00	02_2
SCALE 8:1			SHEET 1 OF 1

CUSTOMER DRAWING

AMP PART # 1059060-1
SHEET 1 OF 1 REV A