THIS DRAWING IS UNPUBLISHED. RELEASED FOR PUBLICATION OCT ,2005.
© COPYRIGHT 2005 By – ALL RIGHTS RESERVED.

LOC	DIST
E	B

REVISIONS

P	LTR	DESCRIPTION	DATE	DWN	APVD
	B	ECO-09-003420	11 Mar 09	RITA	BOB
	C	ECO-12-011817	03 Jul 12	TITAN	MARTIN

NOTES

1. 100 TRAY PACK IN ACCORDANCE WITH AMP SPEC 107-3275
2. SINGLE PACK IN ACCORDANCE WITH AMP SPEC 107-3275
3. Au PLATING
4. Ni PLATING

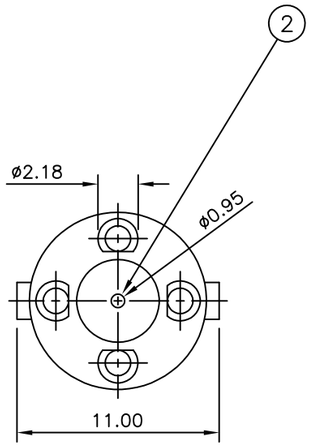

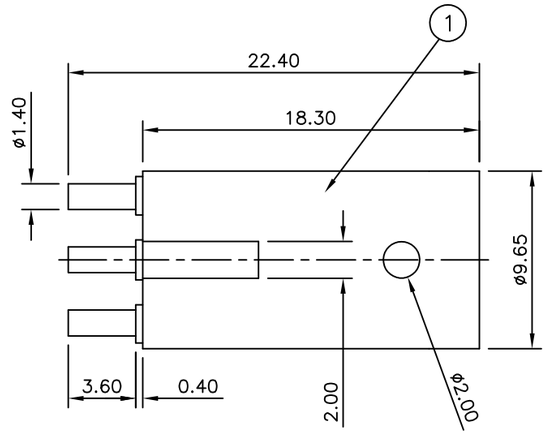

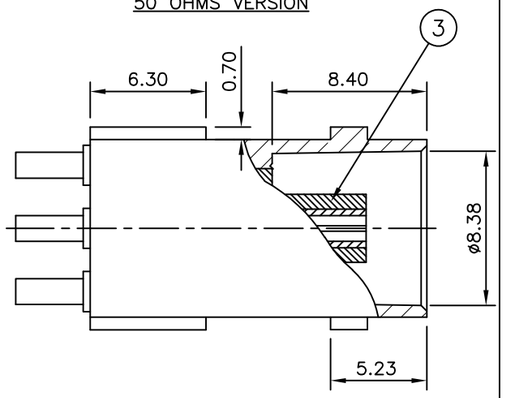

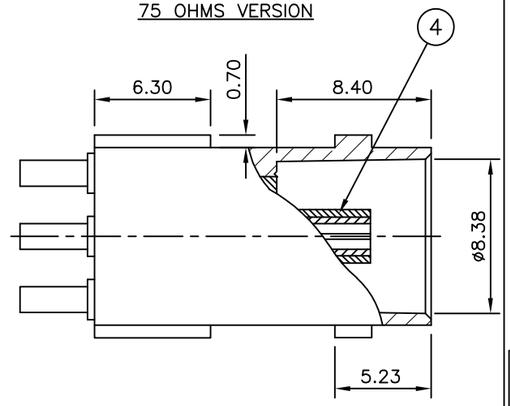

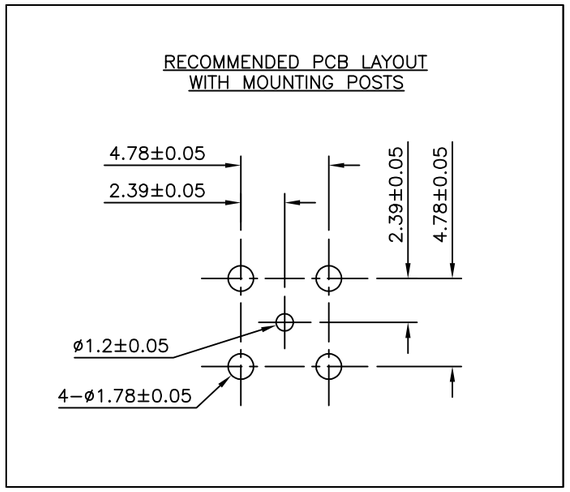

QUANTITY PER ASSY						OBSOLETE	OBSOLETE	PARTS LIST		
				1	1	–	–	TPX	INSULATOR	4
				–	–	1	1	TPX	INSULATOR	3
				1	1	1	1	PHOS BRONZE 3	CONTACT	2
				1	1	1	1	ZINC ALLOY 4	BODY	1
				5--3	5--2	5--1	5--0	MATERIAL	DESCRIPTION	ITEM
				1	2	2	1			

THIS DRAWING IS A CONTROLLED DOCUMENT.

DIMENSIONS: mm

TOLERANCES UNLESS OTHERWISE SPECIFIED:
0 PLC ± –
1 PLC ± –
2 PLC ± –
3 PLC ± –
4 PLC ± –
ANGLES ± –

MATERIAL –

FINISH –

DWN RITA ZUO 11 Mar 09
CHK ANSON MA 11 Mar 09
APVD BOB ZHAO 11 Mar 09
PRODUCT SPEC 108-112000
APPLICATION SPEC –
WEIGHT –

TE Connectivity

NAME BNC STRAIGHT PCB SOCKET
–
–

SIZE	CAGE CODE	DRAWING NO	RESTRICTED TO
A3	00779	C-1634522	–

CUSTOMER DRAWING

SCALE	SHEET	REV
NTS	1 OF 1	C