THIS DRAWING IS UNPUBLISHED. RELEASED FOR PUBLICATION -,- .
© COPYRIGHT - BY TYCO ELECTRONICS CORPORATION. ALL RIGHTS RESERVED.

LOC	DIST
G	86

REVISIONS

P	LTR	DESCRIPTION	DATE	DWN	APVD
	B	REV PER ECR 08-028314	18NOV08	JR	TM

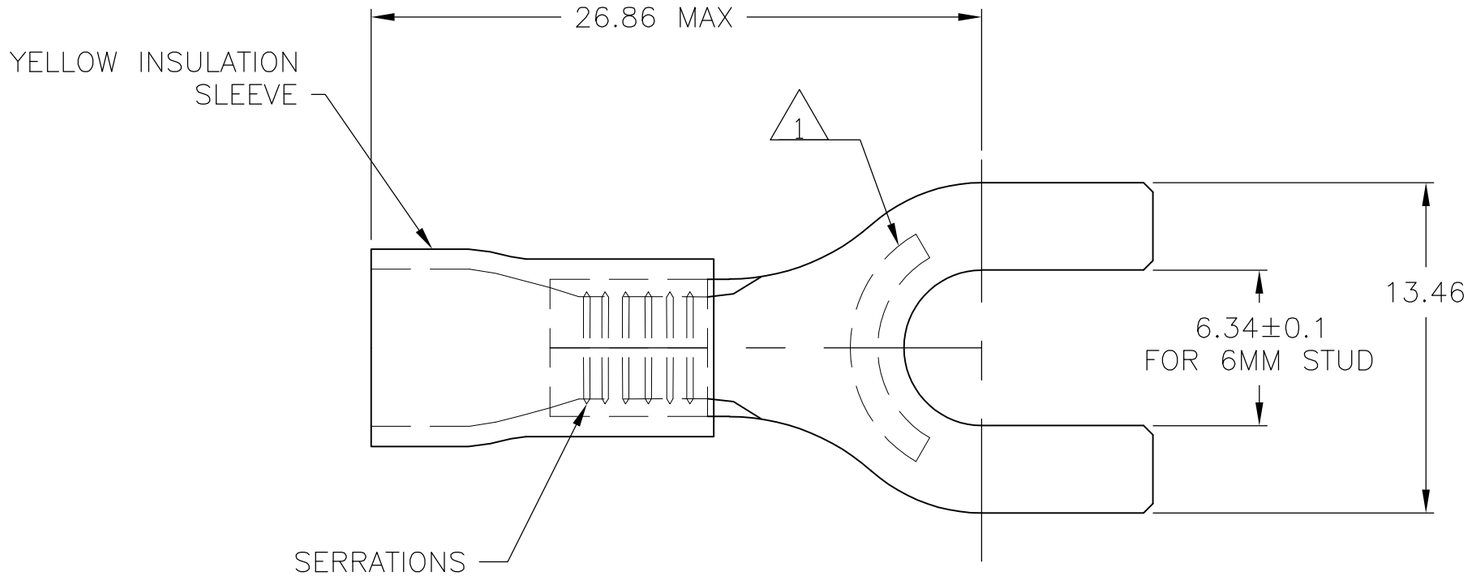

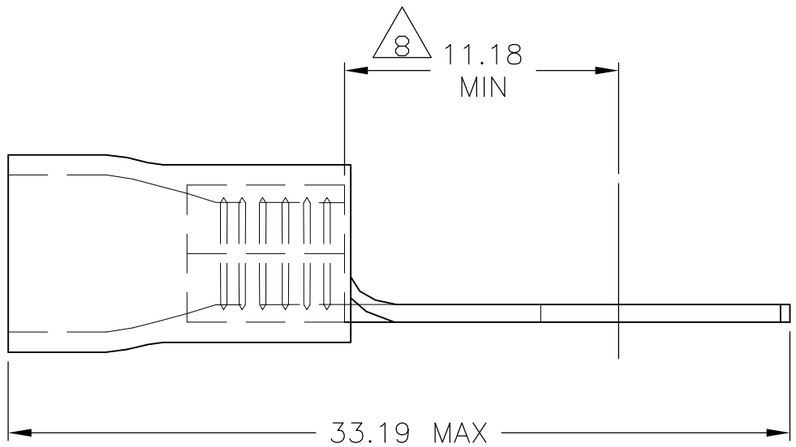

1. STAMP "AMP 12-10*", LOCATION APPROX AS SHOWN.
2. WIRE INSULATION DIA 3.8-6.4
3. OPERATING TEMPERATURE 90°C MAX
4. VOLTAGE RATING 600V MAX
5. CMA 2.62-6.64mm2 [5,180-13,100]
6. MATERIAL:
   BODY - COPPER PER ASTM B-152
   INSULATION - PVC
7. FINISH:
   BODY - TIN PL PER ASTM B-545
   INSULATION - COLOR-YELLOW
8. APPLIES FROM EDGE OF METAL WIRE BARREL TO CENTER OF STUD HOLE.
9. MATERIAL THICKNESS IS 1.00±0.05

165019

PART NO

THIS DRAWING IS A CONTROLLED DOCUMENT.

DIMENSIONS: mm

TOLERANCES UNLESS OTHERWISE SPECIFIED:

0 PLC	± –
1 PLC	± –
2 PLC	± 0.20
3 PLC	± –
4 PLC	± –
ANGLES	± –

MATERIAL –

FINISH –

DWN	JRRUTH	16JUN2004
CHK	T MICHIELUTTI	16JUN04
APVD	T MICHIELUTTI	16JUN04
PRODUCT SPEC	–	
APPLICATION SPEC	–	
WEIGHT	–	

CUSTOMER DRAWING

Tyco Electronics

Tyco Electronics Corporation
Harrisburg, Pa 17105-3608

NAME
RECTANGULAR TONGUE,
SPADE TYPE, PLASTI-GRIP
–

SIZE	CAGE CODE	DRAWING NO	RESTRICTED TO
A3	00779	C-165019	–

SCALE	SHEET	REV
4:1	1 OF 1	B

AMP 1470-19 REV 31MAR2000