REVISIONS					
ZONE	LTR	ECN	DESCRIPTION	DATE	APPROVED
	C	25197	REV. & REDRAWN. ORIGINAL RELEASE 26-8-69 BY B.T. & G.K	3/2/81	MD
	D	38538	REVISION UPDATE	1/29/99	
	D1	43882	UPDATE PER ECO-09-007946	3/30/09	JDM

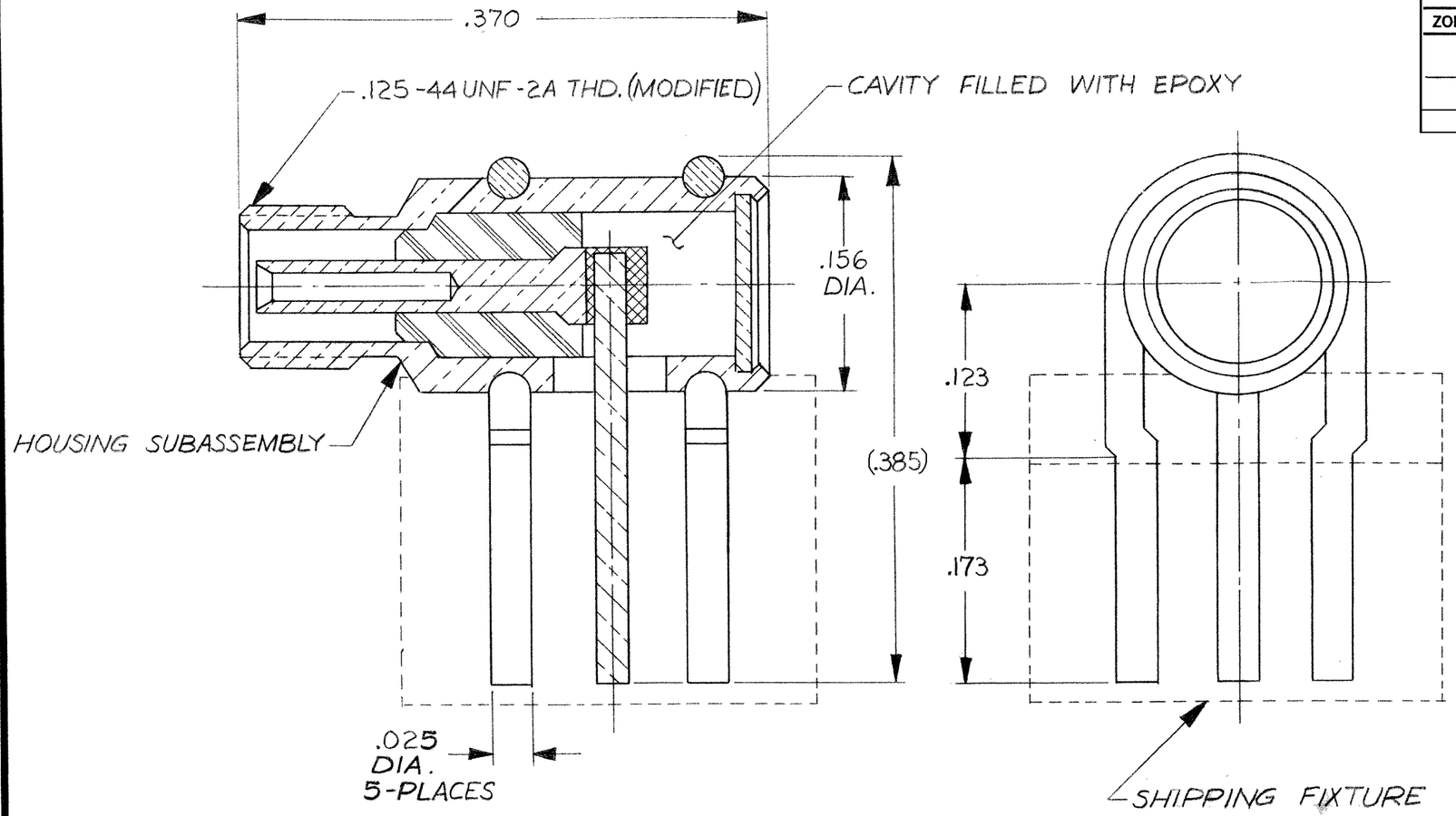

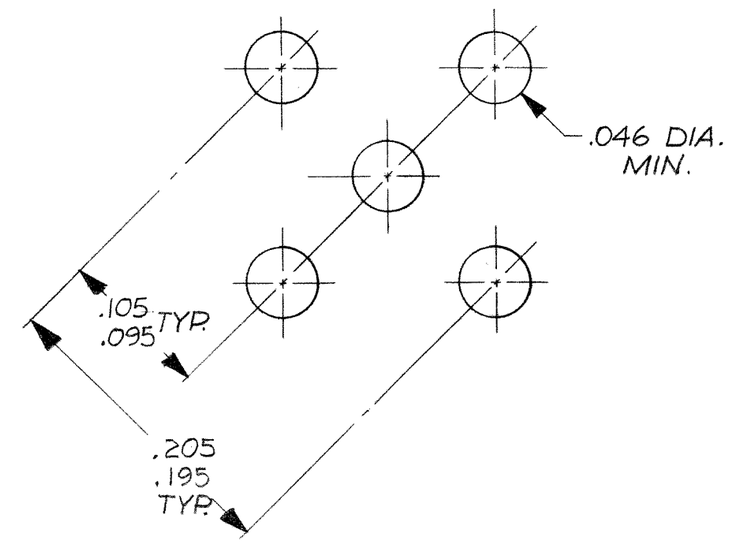

MOUNTING HOLE PATTERN

NOTES: UNLESS OTHERWISE SPECIFIED

1. MATES WITH ALL LEPRA/CON SCREW-ON SERIES PLUGS AS LISTED IN MALCO CATALOG.
2. ALL METAL PARTS ARE GOLD PLATED PER MIL-G-45204, TYPE II, GRADE C, CLASS 1.
3. FOR COMPONENT PARTS, SEE PARTS LIST.

NEXT ASSY	USED ON
APPLICATION	

UNLESS OTHERWISE SPECIFIED DIMENSIONS ARE IN INCHES
TOLERANCES ARE:
FRACTIONS ± DECIMALS .XX ± .XXX ± .015 ANGLES ±

MATERIAL

FINISH NOTED

DO NOT SCALE DRAWING

CONTRACT NO.

APPROVALS	DATE
DRAWN Costel Bonum	2-4-81
CHECKED	2/13/81
PR. ENG.	
APPROVED	

These drawings and specifications are the property of Microdot Inc., are issued in strict confidence and shall not be divulged, be reproduced or copied, or used as the basis for the manufacture or sale of any article without written permission of Microdot Inc.

MALCO
A MICRODOT COMPANY, INC.
306 PASADENA AVE., SO. PASADENA, CALIF. 91030

RECEPTACLE, SCREW-ON
PRINTED CIRCUIT, RIGHT ANGLE
MICRODOT P/N 141-0010-0001

PROD. CODE 946
CODE CDM

SIZE	CODE IDENT NO.	DRAWING NO.
B	98278	1-1532006-4

SCALE ~ SHEET 1 OF 1

BISHOP GRAPHICS/ACCUPRESS REORDER NO. 2196