THIS DRAWING IS UNPUBLISHED. RELEASED FOR PUBLICATION – –. .
© COPYRIGHT – By – ALL RIGHTS RESERVED.

LOC	DIST
G	14

REVISIONS

P	LTR	DESCRIPTION	DATE	DWN	APVD
	C2	REVISED PER ECO-11-005027	11MAR11	RK	HMR

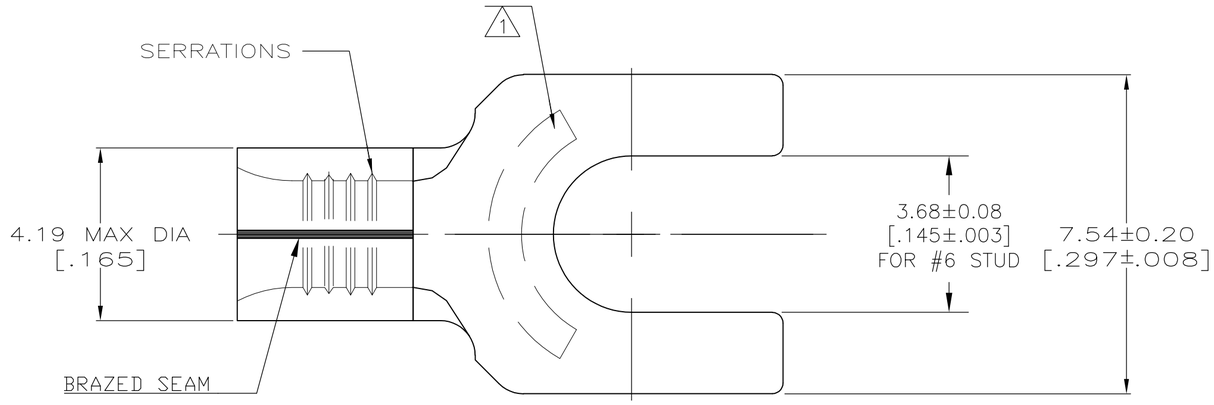

AMP WIRE RANGE	Listed FILE E13288	LR7189 Certified
16–14 AWG SOLID OR STRANDED	16–14 AWG SOLID OR STRANDED	16–14 AWG SOLID OR STRANDED

1. STAMP AMP 16–14*, APPROX AS SHOWN
2. COPPER PER ASTM B–152, ANNEALED
3. 0.00254 [.000100] MIN TIN PER ASTM B–545

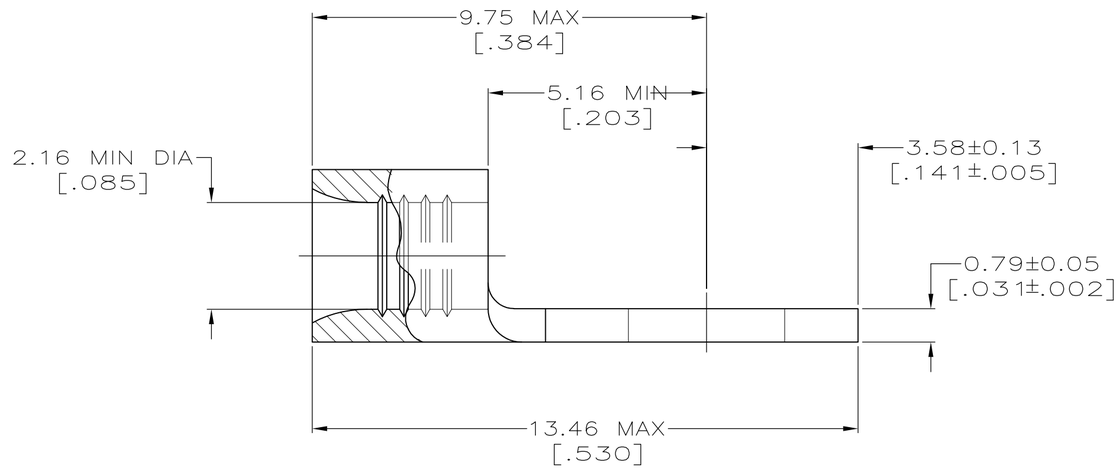

QTY	PACKAGE TYPE	PART NUMBER
100	LOOSE PIECE, BOX	8–322996–1
5000	ON TAPE	2–322996–1
––	LOOSE PIECE	322996

CUSTOMER SERVICE SYSTEMS

FOR ADDITIONAL PRODUCT INFORMATION OR COPIES OF DRAWINGS AND TECHNICAL DOCUMENTS	PRODUCT INFORMATION CENTER 1–800–522–6752
FOR APPLICATION TOOLING INFORMATION	TOOLING ASSISTANCE CENTER 1–800–722–1111
FOR ORDER ENTRY	1–800–526–5142

THIS DRAWING IS A CONTROLLED DOCUMENT FOR AMP INCORPORATED. IT IS SUBJECT TO CHANGE AND THE CONTROLLING ENGINEERING ORGANIZATION SHOULD BE CONTACTED FOR THE LATEST REVISION.

MAX RECOMMENDED OPERATING TEMPERATURE: 170°C MAX

VOLTAGE RATING: N/A

CIRCULAR MIL AREA: 1.04–2.62mm²[2,050–5,180] SOLID OR STRANDED

THIS DRAWING IS A CONTROLLED DOCUMENT.

DIMENSIONS: mm[INCHES]

TOLERANCES UNLESS OTHERWISE SPECIFIED:

0 PLC	± –
1 PLC	± –
2 PLC	± 0.20 [.008]
3 PLC	± –
4 PLC	± –
ANGLES	± –

MATERIAL – 2

FINISH – 3

DWN	TA BRINKMAN	1–28–93
CHK	DA PATTERSON	1–28–93
APVD	JL MECKLEY	1–28–93
PRODUCT SPEC	—	
APPLICATION SPEC	—	
WEIGHT	—	

TE Connectivity

NAME: TERMINAL, SPADE TONGUE, SOLISTRAND –

SIZE	CAGE CODE	DRAWING NO	RESTRICTED TO
A2	00779	C–322996	—

CUSTOMER DRAWING | SCALE 10:1 | SHEET 1 OF 1 | REV C2

322996

1471–9 (3/11)