THIS DRAWING IS UNPUBLISHED. RELEASED FOR PUBLICATION 20
DIFFUSION RESTREINTE/LIMITED FIBRE A LA DIFFUSION
© COPYRIGHT 20 BY - ALL RIGHTS RESERVED. TOUS DROITS RESERVES.

PN TE	
1801326-1 NOIR/BLACK	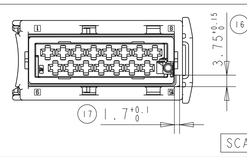 SCALE 1:1
1801326-X BLANC/WHITE	
1801326-3 GRIS/GRAY	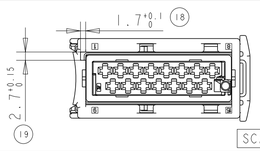 SCALE 1:1
1801326-4 VERT/GREEN	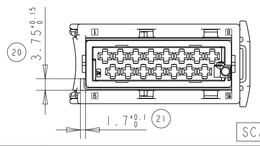 SCALE 1:1
1801326-5 MARRON/BROWN	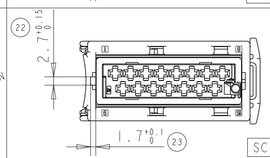 SCALE 1:1
1801326-6 VIOLET	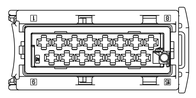 SCALE 1:1

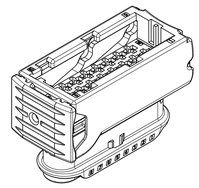

SCALE 1:1

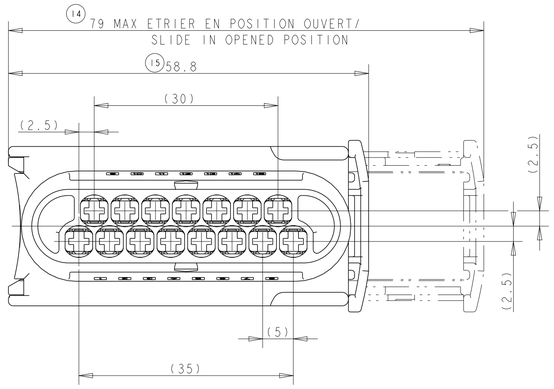

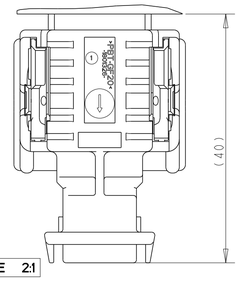

SCALE 2:1

ENCOMBREMENT DU CONNECTEUR
MONTE SUR UNE EMBASE/
OVERALL DIMENSION CONNECTOR MATED ON HIS COUNTERPART

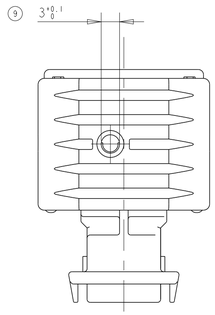

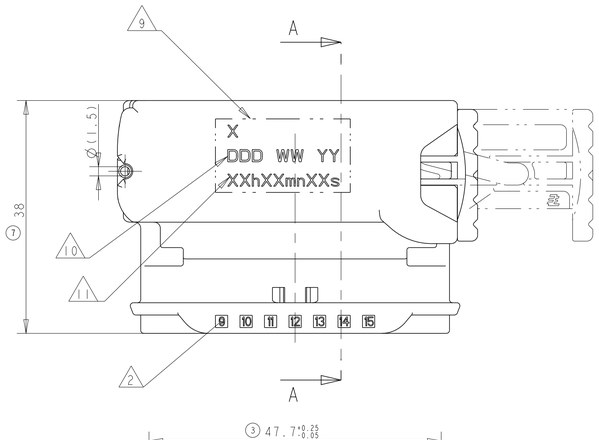

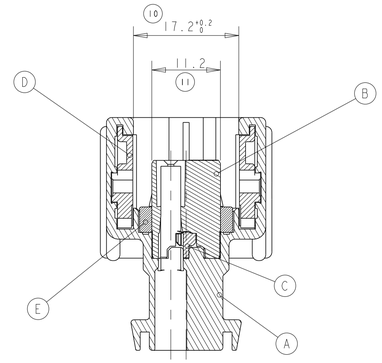

SECTION A-A

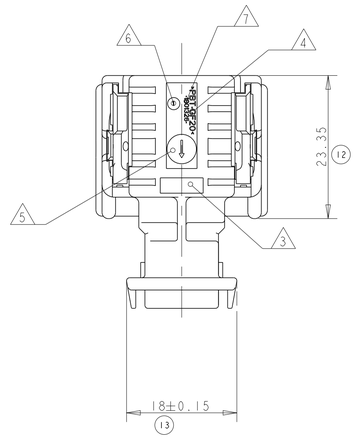

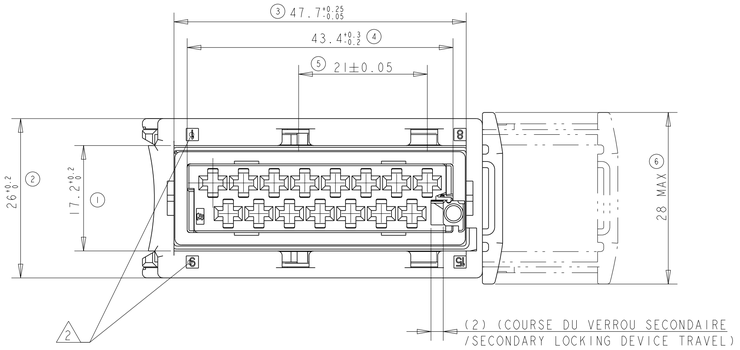

Rep	DESIGNATION	MATERIAUX/ MATERIAL	QTE/ QTY
E	JOINT/GASKET	SILICONE	1
D	ETRIER/SLIDE	PBT 15% FV/GF	1
C	VERROU SECONDAIRE/SECONDARY LOCKING DEVICE	PBT 30% FV/GF	1
B	MODULE FACE AVANT/FRONT FACE MODULE	PBT 20% FV/GF	1
A	BOITIER/HOUSING	PBT 20% FV/GF	1

REVISIONS

P	LTR REV	DESCRIPTION MODIFICATIONS	DATE	DWN DESS.	APVD APP.
	A	INITIAL RELEASE	07MAR2018	OP	XR

NOTE:

1	1801326-1 : REPRESENTE / AS SHONW
2	REPERE ALVEOLES /CAVITY NUMBER
3	LOGO TE / TE LOGO
4	MARQUAGE MATIERE / MATERIAL MARKING
5	DATEUR / DATE CODE
6	N° EMPREINTE / MOLD CAVITY NUMBER
7	REF TE / PN TE
8	ZONE POUR DATE D'ASSEMBLAGE / AREA FOR ASSY DATE CODE
9	DATE D'ASSEMBLAGE / ASSY DATE
10	HEURE D'ASSEMBLAGE / ASSY HOUR

POSITION DE LIVRAISON/DELIVERY POSITION
verrou secondairepre-verrouille/
secondary locking device in pre lock position

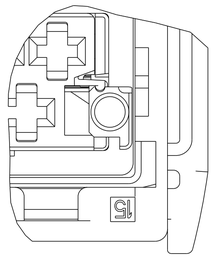

SCALE 4:1

POSITION DE MONTAGE/MATABLE POSITION
verrou secondaire verrouille/
secondary locking device locked

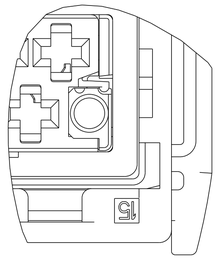

SCALE 4:1

THIS DRAWING IS A CONTROLLED DOCUMENT.
CE PLAN EST UN DOCUMENT CONTROLE PAR TYCO ELECTRONICS CORP.
IL EST SUSCEPTIBLE D'ETRE REVISE, CONTACTER LE SERVICE TECHNIQUE DE TYCO ELECTRONICS POUR OBTENIR LA DERNIERE REVISION.

DIMENSIONS: mm

TOLERANCES UNLESS OTHERWISE SPECIFIED

2 DECIMAL PLACES	±0.2
ANGLES	±5°

MATERIAL MATIERE: VOIR TABLEAU / SEE TABLE

FINISH FINITION: - / -

DWN/DESSINE	O.PAMART	06MAR2018
CHK/VERIFIE	X.ROUILLARD	10MAR2018
APVD/APPROUVE	J.DAHER	10MAR2018
PRODUCT SPEC SPEC. PRODUIT	-	
APPLICATION SPEC SPEC. APPLICATION	411-15726	
WEIGHT MASSE APPROX.	24 g	

TE Connectivity

NAME TITRE: CONNECTOR 15 W GEN 3 TERMINALS AMP MCP

SIZE FORMAT	CAGE CODE	DRAWING NO No PLAN	RESTRICTED TO RESERVE A
A1	00779	C-1801326	

CUSTOMER DRAWING / PLAN CLIENT — UNIQUEMENT POUR REFERENCE — SCALE ECHELLE 2:1 — SHEET FEUILLE 1 OF DE 1 — REV A

4805 (3/13)