Alle Rechte vorbehalten/ *All rights reserved*

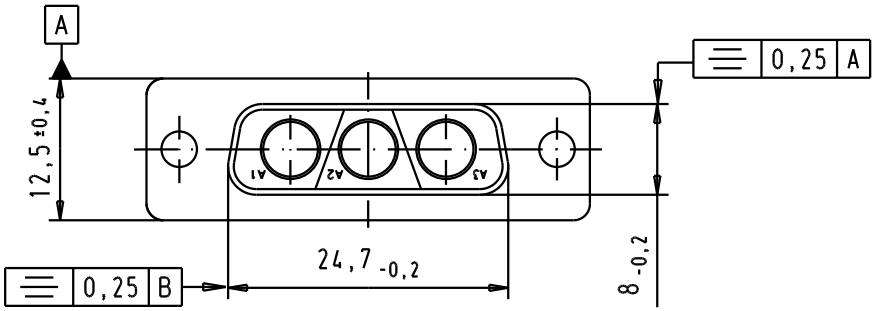

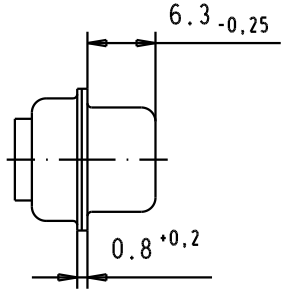

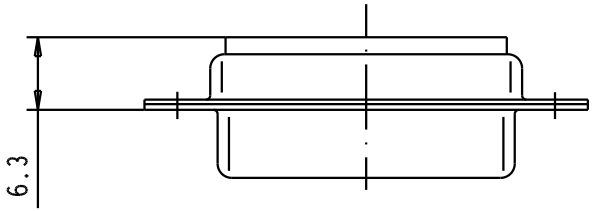

detail : coding

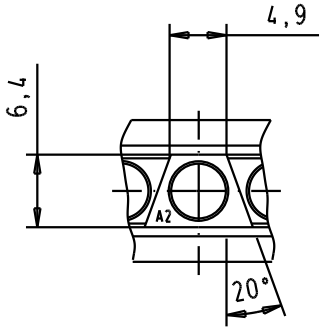

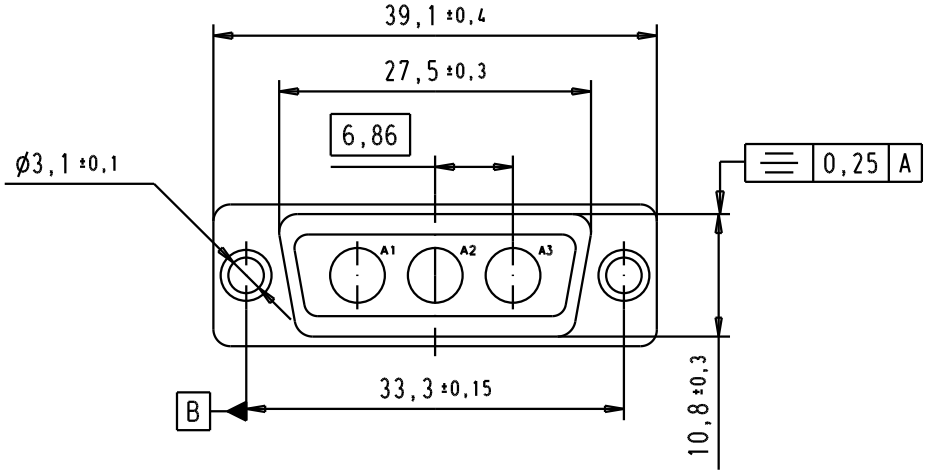

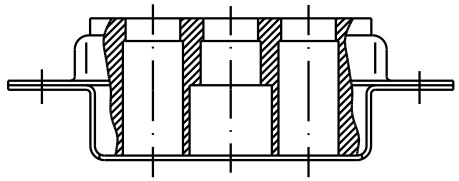

09 69 200 0633.500	Non magnetic					Dat.	Name	All Dim. in mm Orig. Size DIN A 4	D-Sub, female, 3W3 without contacts, with tin plated shell.	Maßstab/ *Scale* 1,5:1
09 69 200 0633		32119	23/06/04	AC	Detail.	12/11/01	AF			
		31519	03/07/03	TCP	Insp.					
Part number		29742	12/11/01	AF	Stand.					
		Mod.	Dat.	Name	HARTING EURL F-95972 Paris				TB 09 69 200 0633	Blatt/ *Page* 1/1
									Sub.	