THIS DRAWING IS UNPUBLISHED. RELEASED FOR PUBLICATION . . - -
© COPYRIGHT - By - ALL RIGHTS RESERVED.

REVISIONS

P	LTR	DESCRIPTION	DATE	DWN	APVD
	W	REV PER ECO 19-014374	12-10-19	CT	DM

1. THIS RECEPTACLE WILL MATE WITH ANY PLUG CONNECTOR WITH THE SAME INSERT ARRANGEMENT AS DEFINED BY MS18274-2.
2. MAXIMUM WIRE INSULATION USED WITH THIS RCPT. IS .054 DIA.
3. Be-Cu RETENTION CLIPS ARE INCLUDED IN INSERTS.
4. CUSTOMER PART NUMBER MAY BE SPLIT BETWEEN FRONT AND REAR SHELLS, SAME SIDE.
5. INSPECTION REQUIREMENTS PER R4383.
6. CONNECTOR SUPPLIED WITH 29 CONTACTS, AMP PART NUMBER 206071-1. INSPECTION REQUIREMENTS PER R4383 WITHOUT TESTS FOR HIGH ALTITUDE DIELECTRIC WITHSTANDING VOLTAGE AS CALLED FOR IN TABLE II SCREENING AND TESTING.
7. UL/CSA DESIGNATION STAMPED IN THIS AREA. (OPTIONAL)
8. CONNECTOR SUPPLIED WITH 36 CONTACTS, AMP PART NUMBER 206071-1. CLASS B TESTING PER GE DOCUMENT 20025720, KIT WITH CONTACTS 206071-1.
9. THESE CONNECTORS ARE QUALIFIED TO GODDARD SPACE FLIGHT CENTER SPECIFICATION S-311-P-4.
10. RESTRICTED TO CAE ELECTRONICS ONLY.

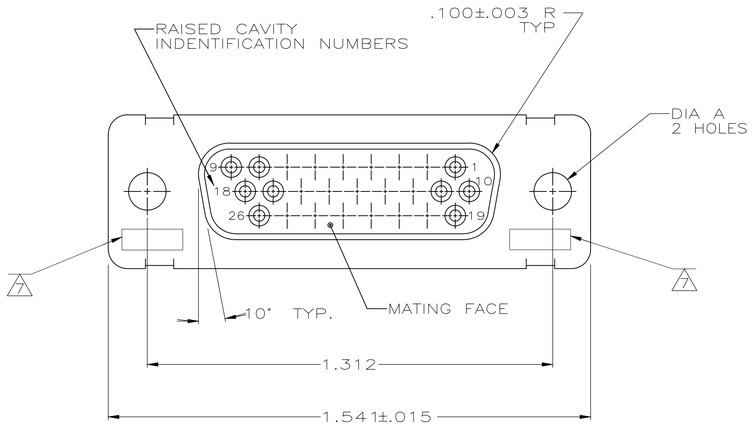

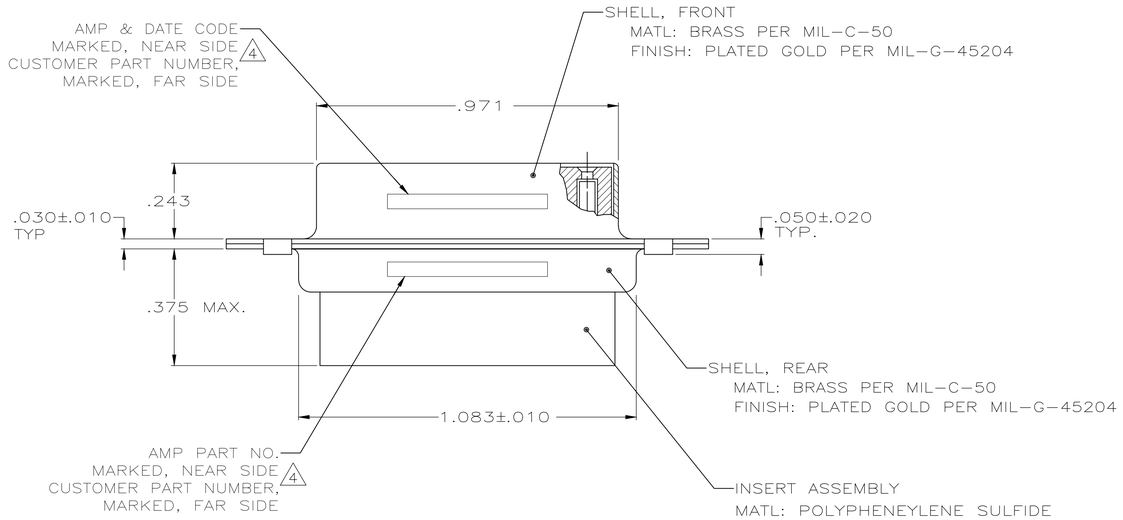

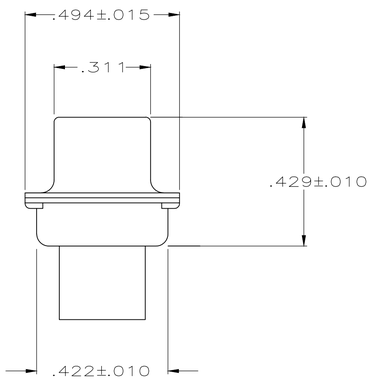

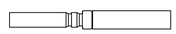

AMP P/N 206071-1
GSFC P/N G-08-S1
(SUPPLIED WITH 206064-6 AND 206064-8 ONLY)

7 7	.120	570566-2	1-206501-0	1-206501-0
9 10	.120	311P407-2S-B-12	206501-4	206501-9
8	.120	20025720P1026S	206501-8	206501-8
	.154	1622380-001	206501-7	206501-7
6	.120	R4383P26S	206501-6	206501-6
5	.120	R4383P26S-2	206501-5	206501-5
9	.120	311P407-2S-B-12	206501-4	206501-4
	.154		206501-3	206501-3
	.120	R9259P26S	206501-2	206501-2
9	.154	311P407-2S-B-15	206501-1	206501-1
REMARKS	DIA A	MARKED CUSTOMER P/N	MARKED AMP P/N	AMP P/N

THIS DRAWING IS A CONTROLLED DOCUMENT.

DIMENSIONS: INCHES

TOLERANCES UNLESS OTHERWISE SPECIFIED:
0 PLC ± -
1 PLC ± -
2 PLC ± -
3 PLC ± .005
4 PLC ± -
ANGLES ± -

MATERIAL: SEE CALLOOUTS
FINISH: SEE CALLOUTS

DWN P. YEAGER 020CT2006
CHK D. MILLER 050CT06
APVD D. MILLER 050CT06
PRODUCT SPEC —
APPLICATION SPEC —
WEIGHT 0.000000

TE Connectivity

NAME: RECEPTACLE, PIN CONTACTS HI-DENSITY D CONNECTOR SIZE 2, 26 POSN, NONMAGNETIC

SIZE A1 | CAGE CODE 00779 | DRAWING NO C-206501 | RESTRICTED TO —

CUSTOMER DRAWING | SCALE 4:1 | SHEET 1 OF 1 | REV W

4805 (1/15)