THIS DRAWING IS UNPUBLISHED. RELEASED FOR PUBLICATION -,- .
© COPYRIGHT - By - ALL RIGHTS RESERVED.

LOC	DIST
AF	50

REVISIONS

P	LTR	DESCRIPTION	DATE	DWN	APVD
	S2	REVISED PER ECR-15-010442	14JULY2015	PK	TD
	S3	REVISED PER ECR-20-009164	15JULY2020	MK	DH

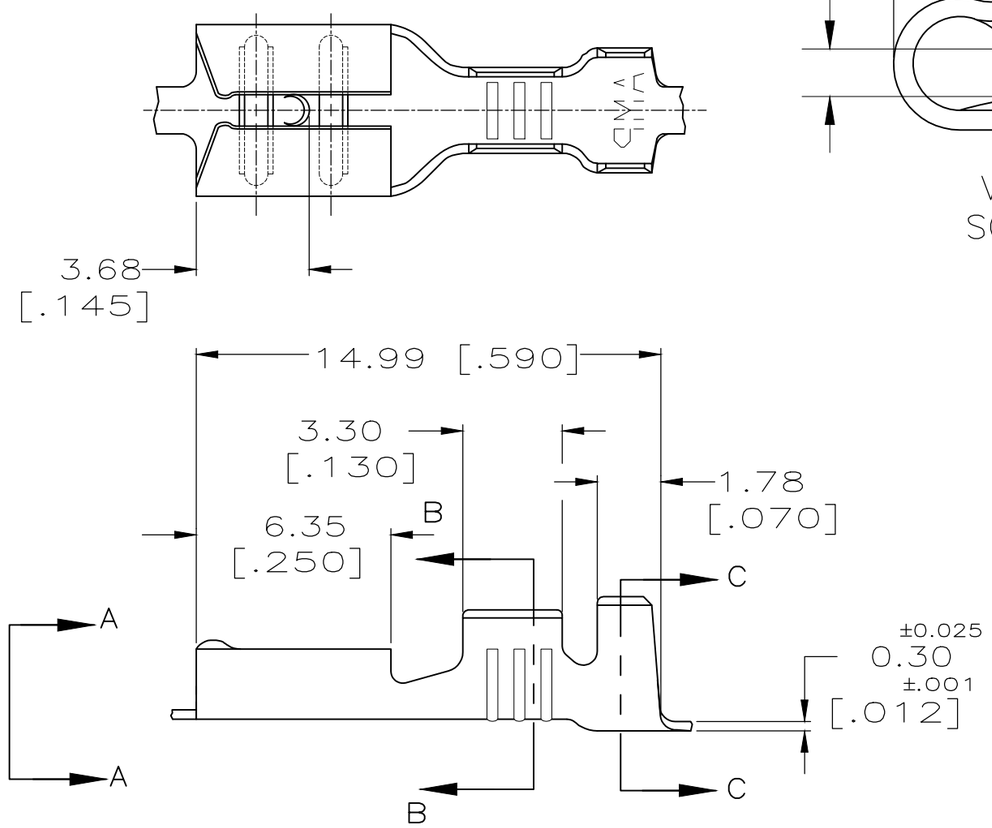

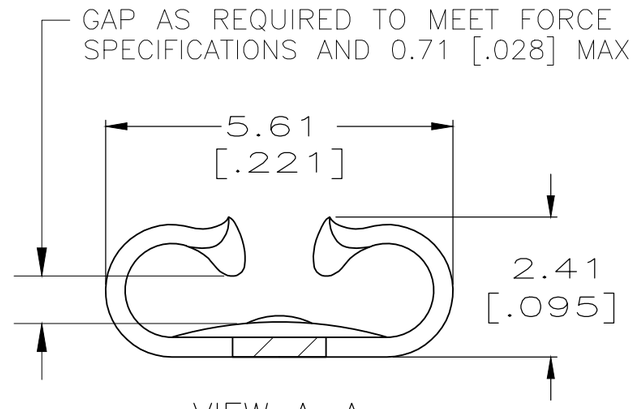

VIEW A–A
SCALE 10:1

1 CONTINUOUS STRIP ON REELS.

2 MATING TAB THK IS 0.84–0.76 [.033–.030].

3 WIRE SIZE IS [20–16] AWG.

4 INSULATION RANGE IS 2.29–3.30 [.090–.130] DIA.

5 60196–8 REFERS TO 60196–1 WITH PAPER INTERLAYER

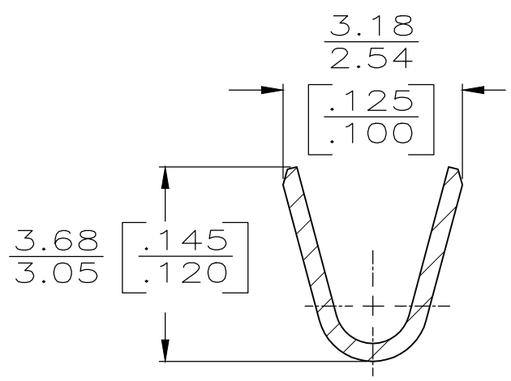

SECTION B–B
SCALE 10:1

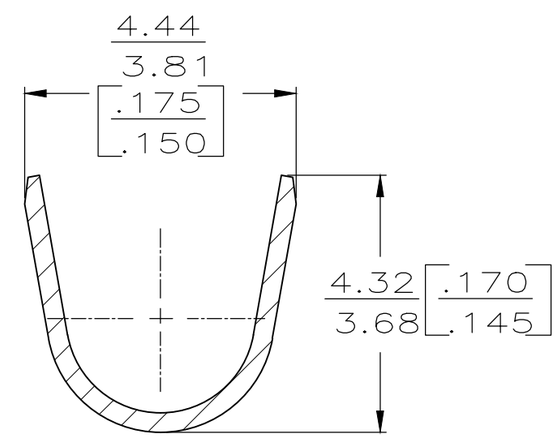

SECTION C–C
SCALE 10:1

LOOSE PIECE	FINISH	PART NO
—	—	60196–8 5
60196–3	TIN	60196–2
—	–	60196–1

THIS DRAWING IS A CONTROLLED DOCUMENT.

DIMENSIONS: INCHES

TOLERANCES UNLESS OTHERWISE SPECIFIED:

0 PLC	± –
1 PLC	± –
2 PLC	± 0.38 [.015]
3 PLC	± –
4 PLC	± –
ANGLES	± –

MATERIAL: BRASS

FINISH: SEE TABLE

DWN JR RUTH 8/27/91
CHK P FORTNEY 8/27/91
APVD C MEYERS 8/27/91
PRODUCT SPEC —
APPLICATION SPEC —
WEIGHT —

CUSTOMER DRAWING

TE Connectivity

NAME: RECEPTACLE, FASTON, 4.75 [.187] SERIES —

SIZE	CAGE CODE	DRAWING NO	RESTRICTED TO
A3	00779	C-60196	—

SCALE	SHEET	REV
5:1	1 OF 1	S3