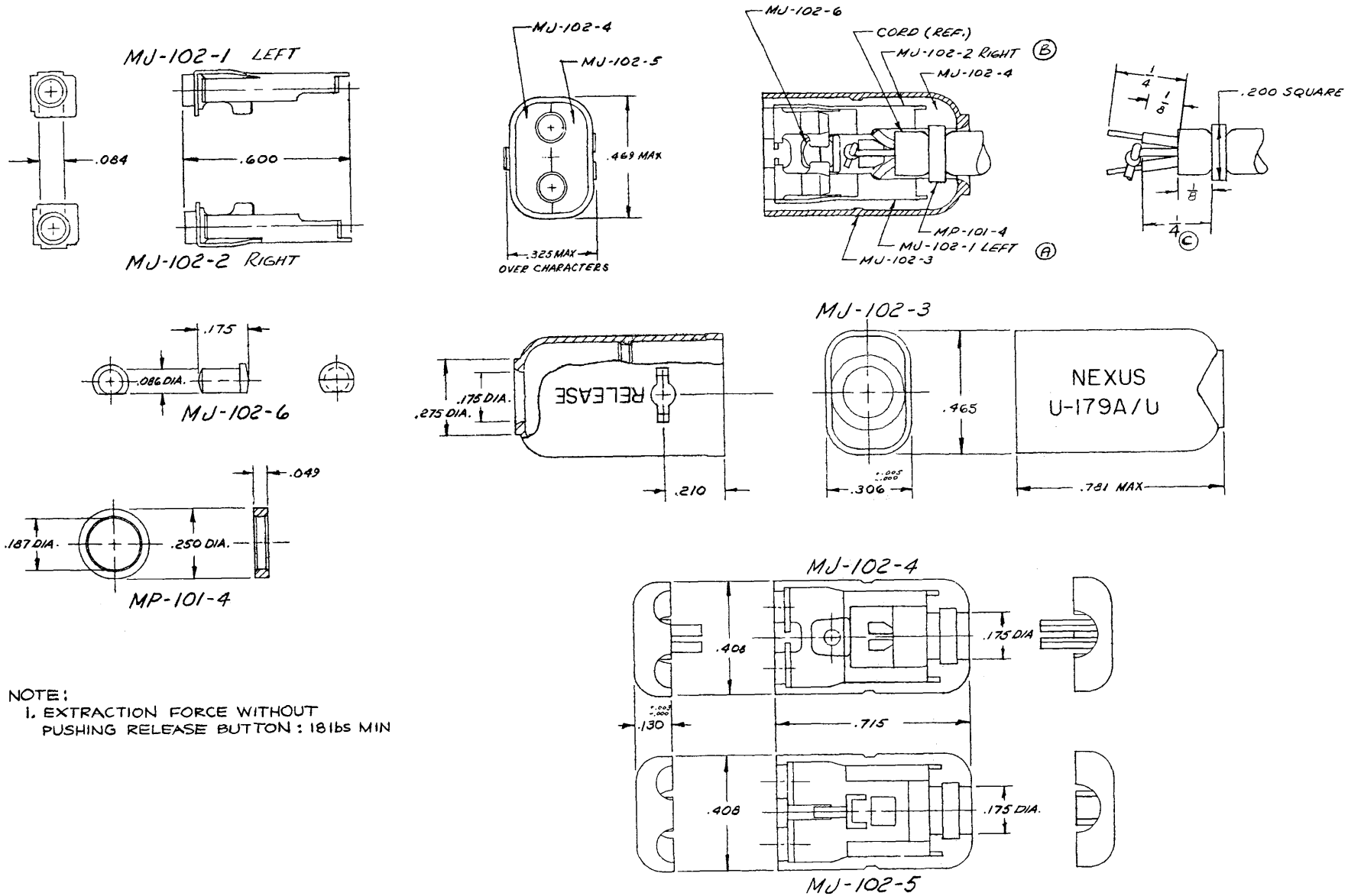

NOTE:
1. EXTRACTION FORCE WITHOUT PUSHING RELEASE BUTTON : 18 lbs MIN

LET.	REVISION	DATE	CHK.
F	ADDED NOTE 1	10-1-90	
E	465 WAS .458	4/13/88	
D	ADD TOLERANCE	9/3/85	RNJ
C	ADD 1/4, REMOVE 1/8	8/20/85	RNJ
B	WAS MJ-102-2	11/20/74	RNJ
A	WAS MJ-102-1	4/9/74	RNJ

DWN. BY M. Ambro — DATE 5-27-69
CHECKED BY
APPR. BY
UNLESS OTHERWISE SPECIFIED DIMENSIONS ARE IN INCHES TOLERANCES ON FRACTIONS ±1/64 DECIMALS ±.005 ANGLES
MATERIAL
FINISH
WEIGHT — SCALE 4:1
TITLE MICROPHONE JACK
DO NOT SCALE DWG. — SHEET OF

NEXUS
STAMFORD, CONN.
SIZE C — DWG. NO. MJ-102

C MJ-102