PART NUMBER
147-0731-201

REV	ECO	DATE
1	INITIAL RELEASE	30SEP2021

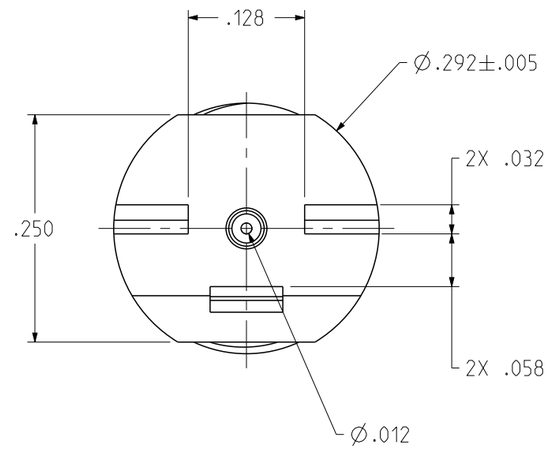

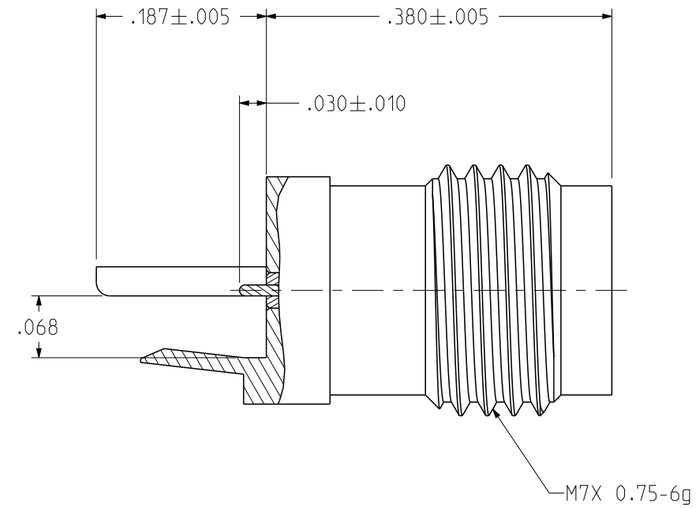

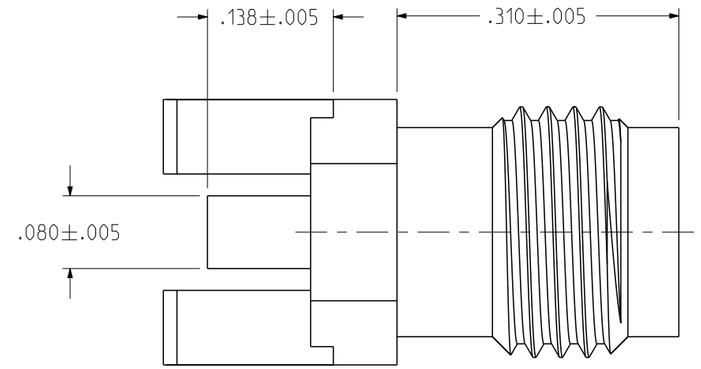

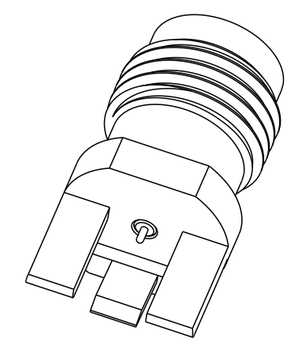

SCALE 4:1

NOTES:

1. MATERIALS AND FINISH:
   1.1 BODIES: GOLD PLATED BRASS
   1.2 CONTACT: GOLD PLATED BERYLLIUM COPPER
   1.3 INSULATOR: PTFE

2. ELECTRICAL SPECIFICATIONS:
   2.1 IMPEDANCE: 50 OHMS
   2.2 FREQUENCY RANGE: DC-50 GHz
   2.3 VSWR: 1.50 MAX
   2.4 WORKING VOLTAGE: 150 VRMS MAX AT SEA LEVEL
   2.5 DIELECTRIC WITHSTANDING VOLTAGE: 500 VRMS MIN AT SEA LEVEL
   2.6 INSULATION RESISTANCE: 5000 MEGOHM MIN
   2.7 CONTACT RESISTANCE:
      2.7.1 CENTER CONTACT - INTIAL 4.0 MILLIOHM MAX, AFTER ENVIRONMENTAL NOT APPLICABLE
      2.7.2 OUTER CONDUCTOR - INITIAL 2.5 MILLIOHM MAX, AFTER ENVIRONMENTAL NOT APPLICABLE

3. MECHANICAL SPECIFICATIONS:
   3.1 ENGAGEMENT/DISENGAGEMENT FORCE: 2 INCH-POUNDS MAX
   3.2 MATING TORQUE: 7 TO 10 INCH-POUNDS
   3.3 DURABILITY: 500 CYCLES MIN

4. ENVIRONMENTAL:
   (MEETS OR EXCEEDS THE APPLICABLE PARAGRAPH OF MIL-PRF-39012)
   4.1 THERMAL SHOCK: MIL-STD-202, METHOD 107, CONDITION B
   4.2 OPERATING TEMPERATURE: -65 °C TO 165 °C
   4.3 CORROSION: MIL-STD-202, METHOD 101, CONDITION B
   4.4 SHOCK: MIL-STD-202, METHOD 213, CONDITION I
   4.5 VIBRATION: MIL-STD-202, METHOD 204, CONDITION D
   4.6 MOISTURE RESISTANCE: MIL-STD-202, METHOD 106

cinch CONNECTIVITY SOLUTIONS cinchgroup

This PROPRIETARY Document is property of Cinch Connectivity Solutions. It is confidential in nature, non-transferable, and issued with the clear understanding that it is not traced or copied without permission and is returnable upon demand.

INTERPRET DRAWING IN ACCORDANCE WITH ASME Y14.5-2009.

Model No: 147-0731-201/210

RoHS ☑ (EU)/2015/863 COMPLIANT

UNLESS OTHERWISE SPECIFIED UNITS: INCH
.XX ± .01
.XXX ± .003
.XXXX ± .0010
ANGLE ± 2°

Cage Code

3RD ANGLE PROJECTION

Drawn by: Roman Yao

Date: 09/30/2021

JOHNSON

Title: 2.4MM JACK, PCB END LAUNCH, SELF FIXTURING FOR .062 BOARD

Drawing No. 147-0731-201/210

REV. 1

Size B | DO NOT SCALE DRAWING | Workmanship Std NONE | Sheet 1 OF 1