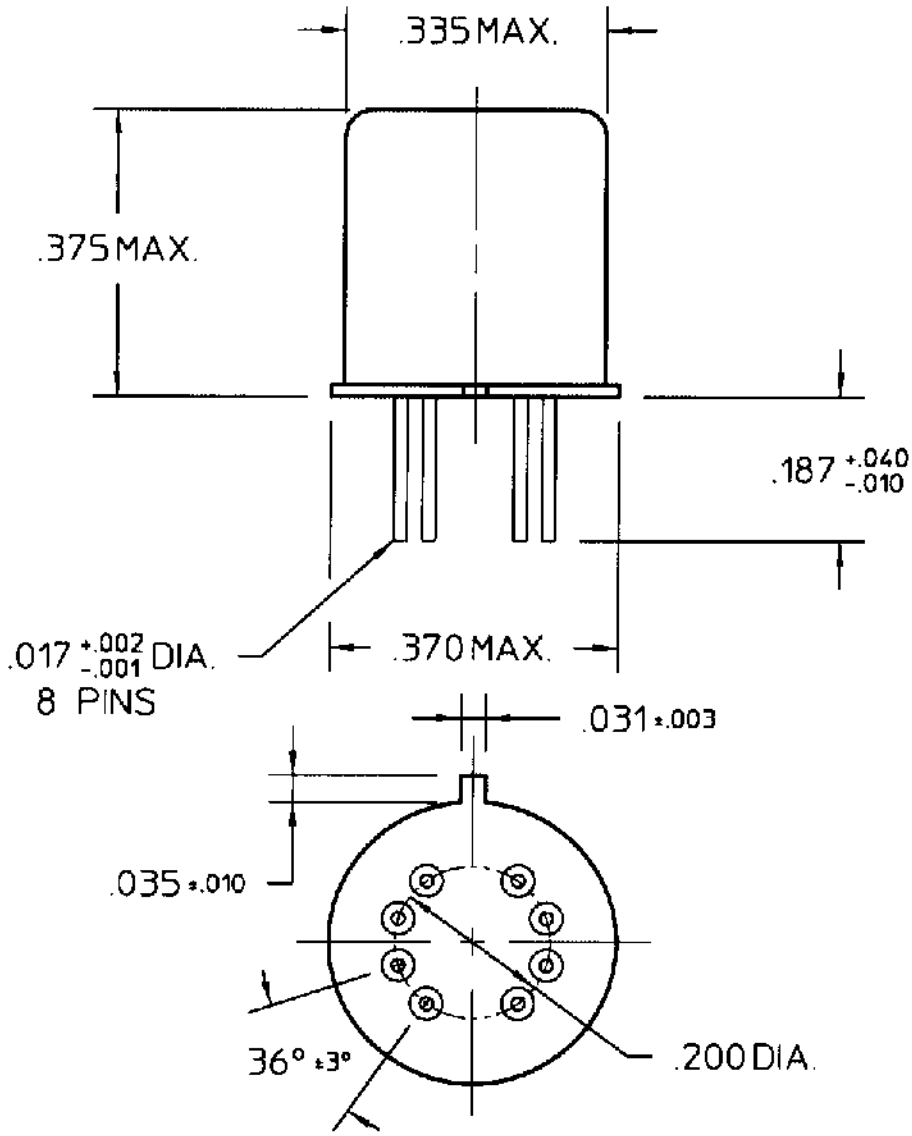

COIL: @ 25°C

RESISTANCE	850 OHMS ± 10%
NOMINAL VOLTAGE	12.0 VDC
MUST OPERATE	7.0 VDC
MUST RELEASE	4.0 VDC MAX, 0.64 VDC MIN.

ENVIRONMENT:

VIBRATION 10 CPS TO 3000 CPS @ 30 g's

SHOCK 75 g's 6 MS. DURATION

TEMPERATURE -65 °C TO +125 °C

NOTES: OPERATE TIME 4 MS MAX
RELEASE TIME 7.5 MS MAX
CONTACT STABILIZATION 2.0 MS MAX

CUSTOMER DATA SHEET

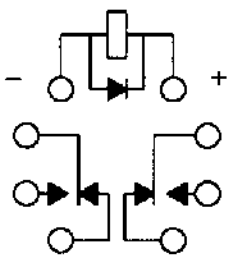

CONTACT RATING: LOW LEVEL TO 1A
28 VDC RESISTIVE 100,000 OPERATIONS

DR. R.B. 4/1/98 CK. 4/1/98

COMMUNICATIONS INSTRUMENTS, INC.

CUST. QPL
CUST. NO. M39016/16-027M

TYPE JMSD RELAY

JMSPD-12XM