TABLE 1

YAZAKI SUB ASSEMBLY PART NO.	NO.	YAZAKI PART NO.	MATERIAL	COLOR	QTY.
7282-1040 ETC.	1	SEE TABLE 2	HPA	SEE TABLE 2	1
	2	7158-4024	HPA	NATURAL	1

TABLE 2

YAZAKI SUB ASSEMBLY PART NO.	YAZAKI PART NO.	COLOR
7282-1040	7182-1040	NATURAL
7282-1040-10	7182-1040-10	DARK GRAY
7282-1040-30	7182-1040-30	BLACK
7282-1040-40	7182-1040-40	LIGHT GRAY
7282-1040-50	7182-1040-50	ORANGE
7282-1040-60	7182-1040-60	GREEN
7282-1040-70	7182-1040-70	YELLOW
7282-1040-80	7182-1040-80	BROWN
7282-1040-90	7182-1040-90	BLUE

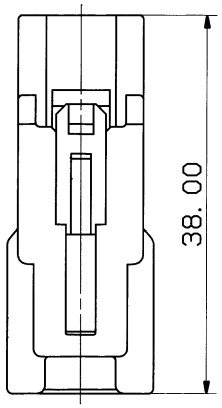

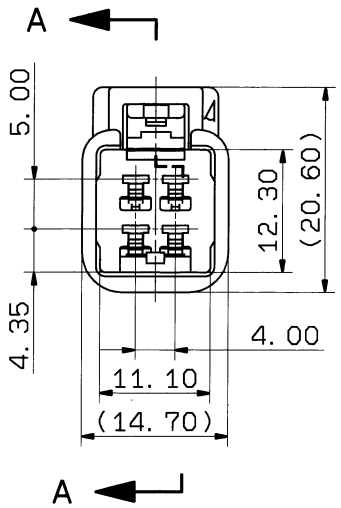

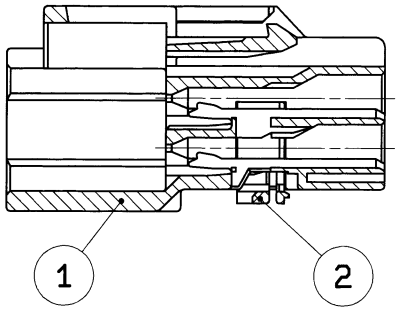

SEC. A-A

注 記

1) 嵌合相手品番:7283-1040 ETC.

2) 適用端子品番:7114-4020 ETC.

NOTES

1) MATING PART NO. :7283-1040 ETC.

2) APPLICABLE TERMINAL NO. :7114-4020 ETC.

ISSUE MARK

LET	DATE	REVISION RECORD	NO.	CHKD
	96. 08. 19	NEW	C96-L545	H. K

GENERAL TOLERANCE

	10MAX	50MAX	100MAX	250MAX	2500VR	ANGLE	ECCENT
A	±0. 15	±0. 2	±0. 3	±0. 5	±0. 75	±30'	0. 1
B	±0. 2	±0. 3	±0. 55	±0. 95	±1. 4	±30'	0. 1
C	±0. 3	±0. 5	±0. 8	±1. 4	±2	±30'	0. 15

SPECIFIED

MASS g

CUSTOMER

CUSTOMER PART NO. | CUSTOMER DWG NO.

OFFICE | TRIAL PART NO.

VENDOR

VENDOR NO.

DWG TYPE	DWG SOURCE	DWG DATE	UNIT	SCL	ANGLE
R	NEW	96. 08. 19	mm	2/1	3

APPROVED	CHECKED	CHECKED	DESIGN	DRAWN
98.08.22		96.08.19	T. MIWA 96. 03. 04	SHINDOH 96. 08. 19

MATL. SPEC. SEE TABLE 1 | TREAT. & FIN.

NAME 090II 4P CONNECTOR SUB ASSEMBLY MALE

PART NO. CH. CODE 7282-1040 ETC.

DWG NO. 7282-1040:R

YAZAKI CORPORATION