Sep.1.2024 Copyright 2024 HIROSE ELECTRIC CO., LTD. All Rights Reserved.
In case of consideration for using Automotive equipment device which demand high reliability, kindly contact our sales window correspondents.

	COUNT	DESCRIPTION OF REVISIONS	BY	CHKD	DATE		COUNT	DESCRIPTION OF REVISIONS	BY	CHKD	DATE
△					. .	△					. .
△					. .	△					. .
△					. .	△					. .

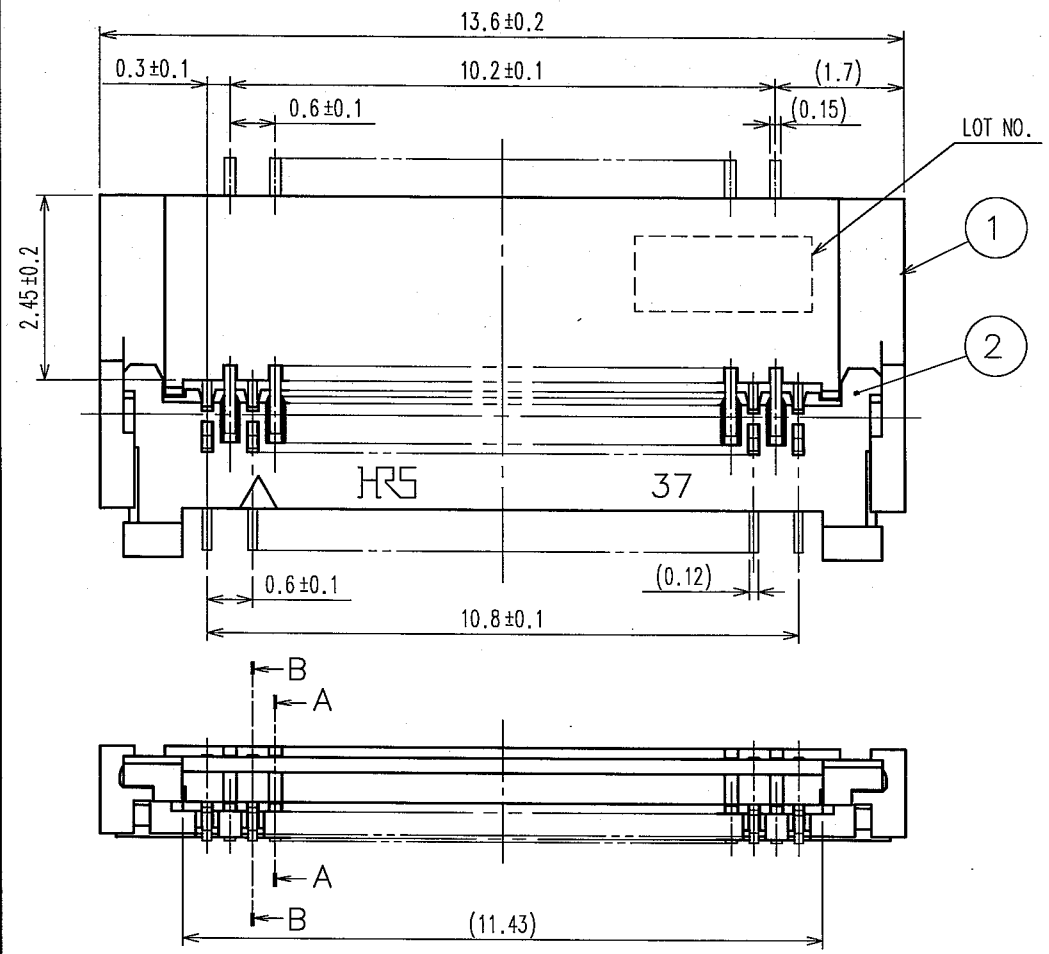

A-A(20:1)

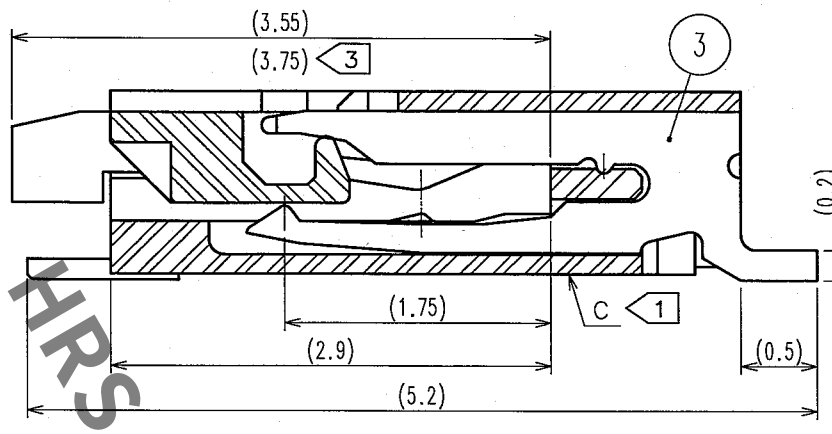

B-B(20:1)

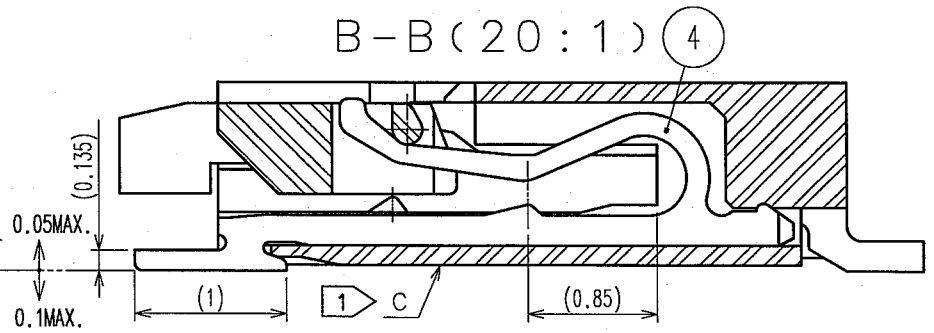

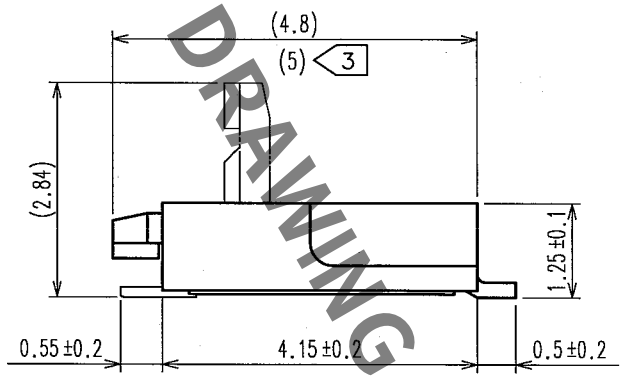

注 1 DIMENTIONS FROM REFERENCE SURFACE C (BOTTOM SURFACE OF HOUSING).
2 LEAD CO-PLANARITY SHALL BE 0.1 MAX.
3 LENGTH AFTER FPC IS INSERTED.
4 $0.3^{+0.04}_{-0.03}$ CAN BE APPLIED WITH LEAD PLATED.
5 NOTE THAT PREVENTIVE HOLE FOR SINK MARK COULD BE ADDED FOR IMPROVEMENT.
THE QUALITY REMAINS GOOD, EVEN WITH THE DARK SPOTS, WHICH COULD OCCASIONALLY OCCUR ON MOLDED PLASTIC.

RECOMMENDED LAND PATTERN, METAL MASK(FREE)

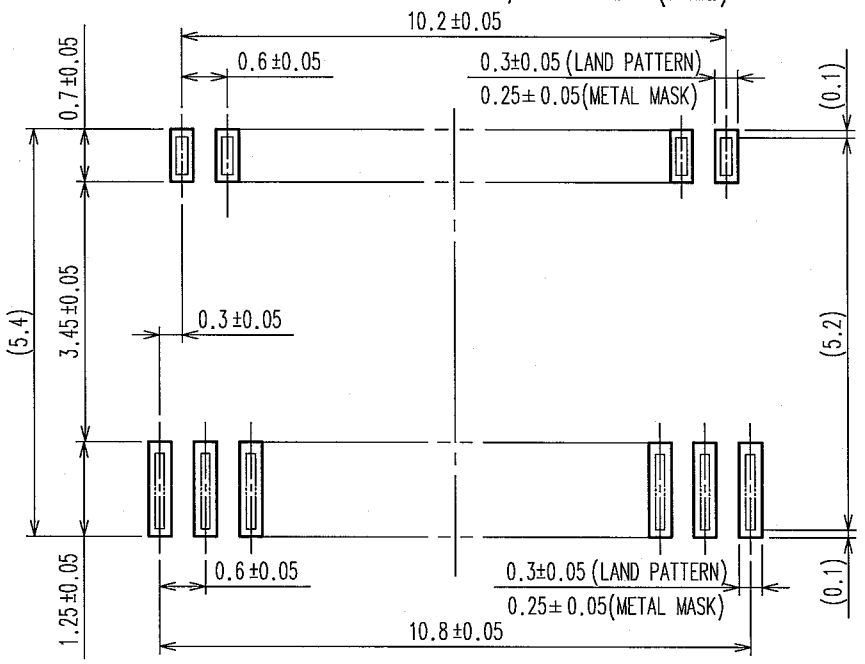

RECOMMENDED METAL MASK THICKNESS : t=0.10

RECOMMENDED FPC(FREE)

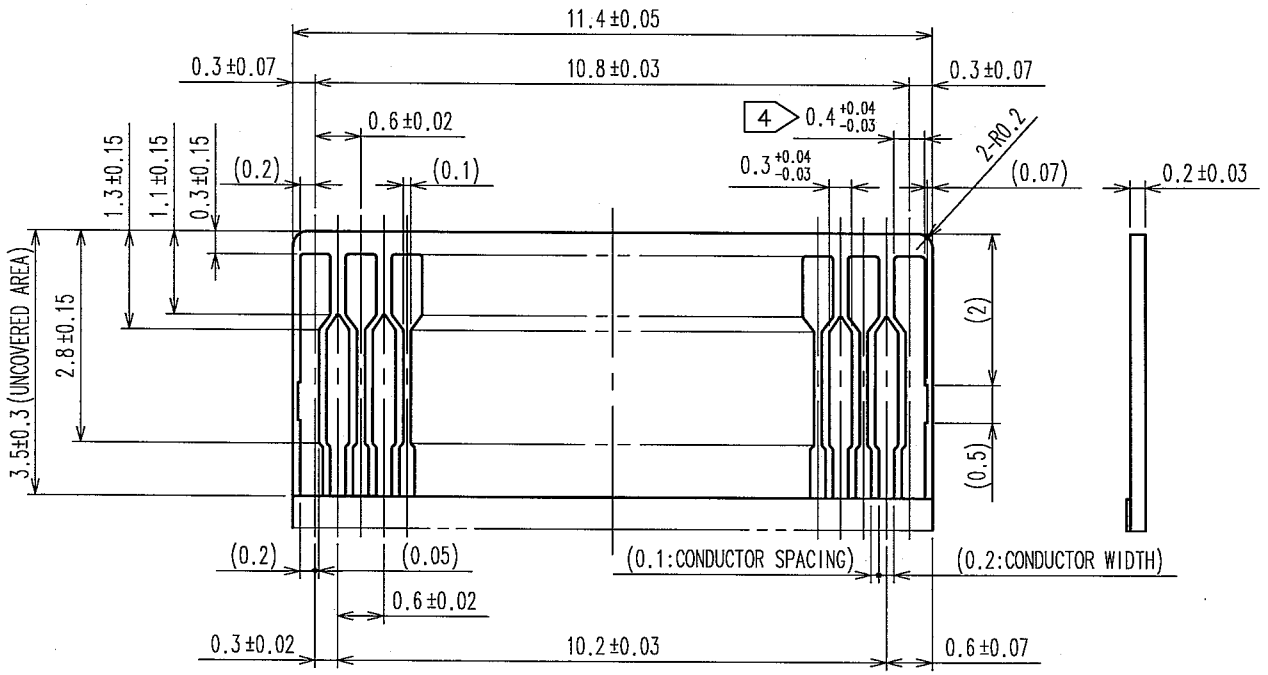

RECOMMENDED STIFFENER MATERIAL:POLYIMIDE, HEAT CURED ADHESIVE.

HRS DRAWING FOR REFERENCE

NO.	MATERIAL	FINISH, REMARKS	NO.	MATERIAL	FINISH, REMARKS
3	PHOSPHOR BRONZE	GOLD FLASH OVER NICKEL 1μm MIN			
2	LCP	BLACK UL94V-0			
1	LCP	BEIGE UL94V-0	4	PHOSPHOR BRONZE	GOLD FLASH OVER NICKEL 1μm MIN

CODE NO.(OLD)	DRAWN	DESIGNED	CHECKED	APPROVED	RELEASED
	K.YAMAMOTO 06.02.21	T.SHIBUYA 06.02.21	H.Kishi 06.02.22	R.Takayama 06.02.22	. .

SCALE 10 : 1
UNITS mm

DRAWING NO. EDC3-155959-01

HRS HIROSE ELECTRIC CO., LTD

PART NO. FH23-37S-0.3SHW(05)

CODE NO. CL586-1335-1-05

1/2

FH

FORM NO.229

TO
NC

Sep.1.2024 Copyright 2024 HIROSE ELECTRIC CO., LTD. All Rights Reserved.
In case of consideration for using Automotive equipment / device which demand high reliability, kindly contact our sales window correspondents.

	COUNT	DESCRIPTION OF REVISIONS	BY	CHKD	DATE		COUNT	DESCRIPTION OF REVISIONS	BY	CHKD	DATE
△					. .	△					. .
△					. .	△					. .
△					. .	△					. .

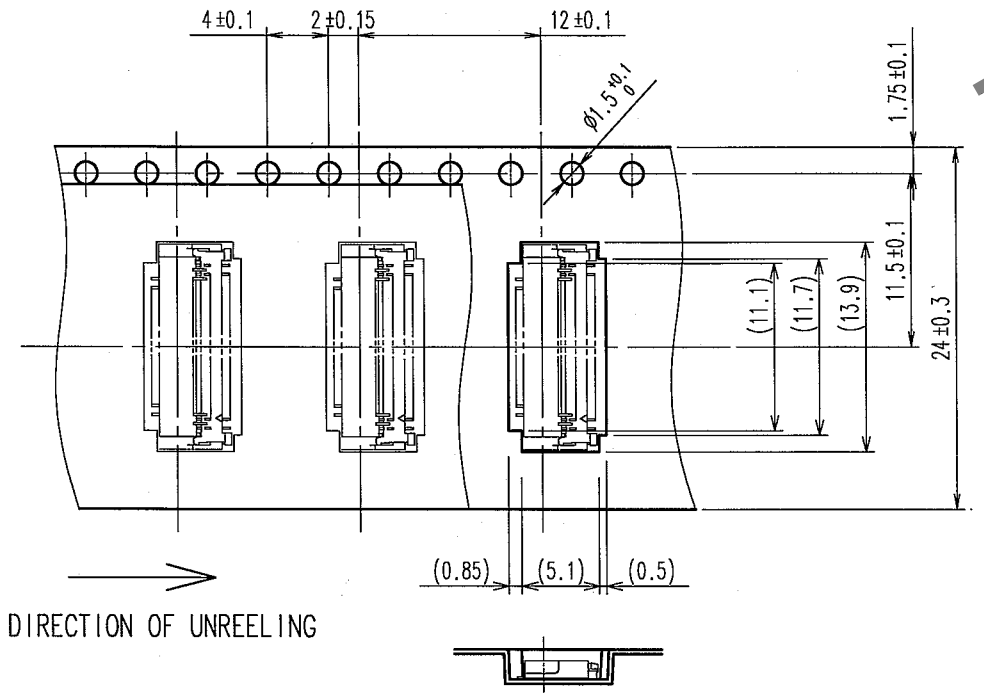

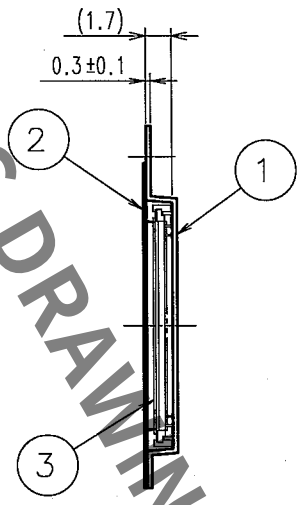

REEL DIMENTION (FREE)

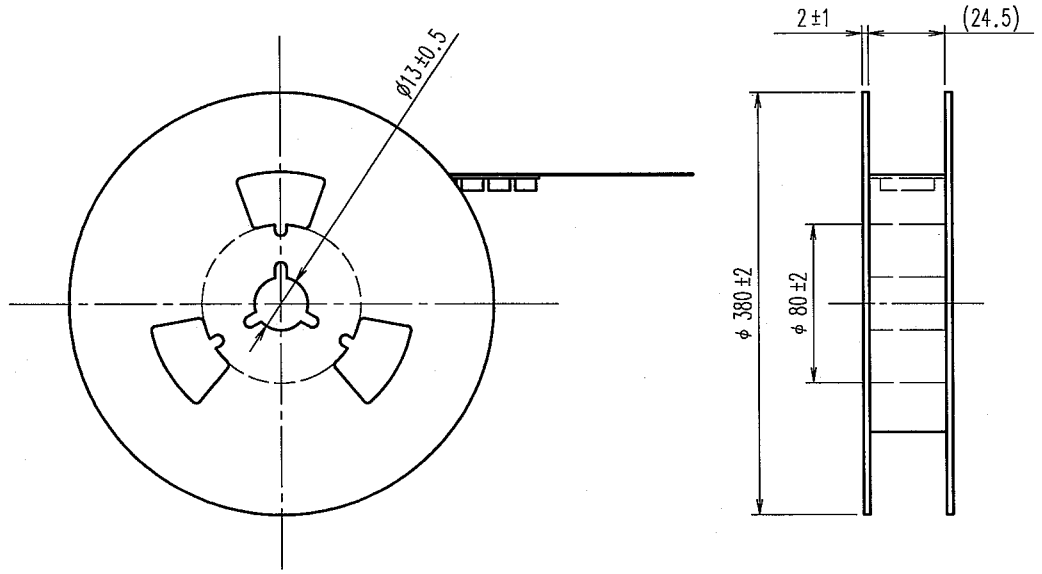

HRS DRAWING FOR REFERENCE

NOTES 1 THE DIMENTIONS IN PARENTHSES ARE FOR REFERENCE.
2 PER REEL : 2500 CONNECTORS.

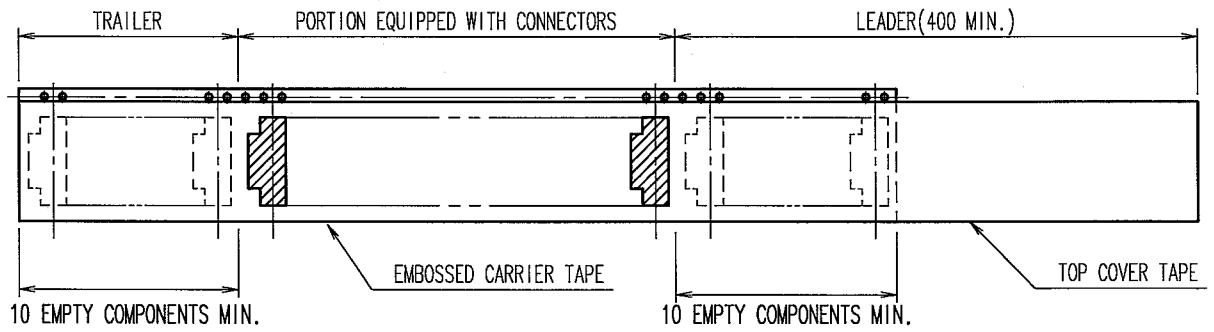

NO.	MATERIAL	FINISH, REMARKS	NO.	MATERIAL	FINISH, REMARKS
2	POLYESTER		4		
1	POLYSTYRENE		3	(CONNECTOR)	

CODE NO.(OLD)	DRAWN	DESIGNED	CHECKED	APPROVED	RELEASED
	K.YAMAMOTO 06.02.21	T.SHIBUYA 06.02.21	H.Kishi 06.02.22	R.Takayama 06.02.22	. .

SCALE 2 : 1	DRAWING NO. EDC3-155959-01	PART NO. FH23-37S-0.3SHW(05)
UNITS mm	HRS HIROSE ELECTRIC CO., LTD	CODE NO. CL586-1335-1-05 2/

TO
NC

FORM NO.229