© 2019 TE Connectivity. All Rights Reserved.

REVISIONS					
P	LTR	DESCRIPTION	DATE	DWN	APVD
	A	RELEASED FOR PRODUCTION	06AUG2019	RK	PS

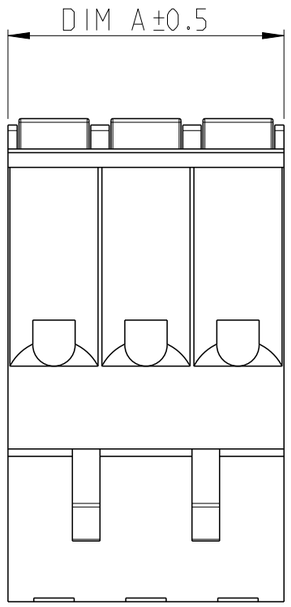

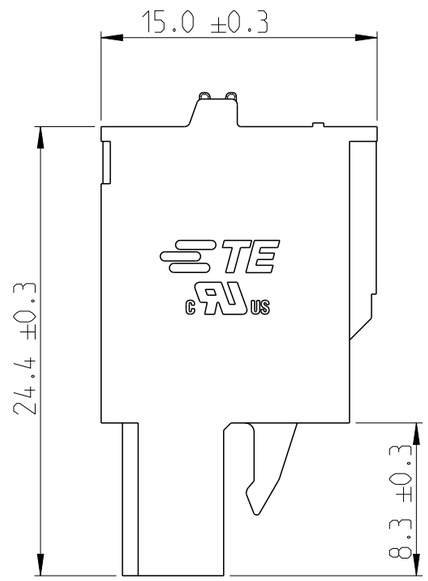

1:1

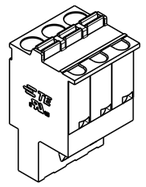

NOTES:

1. MATERIALS & FINISH
   - HOUSING : PA66, UL94 V0, COLOR - GREEN
   - PUSH BUTTON : PA66, COLOR - ORANGE.
   - CONTACT : COPPER ALLOY, TIN PLATED
   - SPRING : STAINLESS STEEL
2. MECHANICAL
   - WIRE STRIPPING LENGTH : 12-13 mm
3. ELECTRICAL
   - WIRE RANGE : 12-26 AWG
   - RATED VOLTAGE : 300V
   - RATED CURRENT : 16A
   - INSULATION RESISTANCE : >2000 M Ohm (500V DC)
4. OPERATING TEMPERATURE RANGE : -40°C TO +105°C

5 TOLERANCE NOT CUMULATIVE

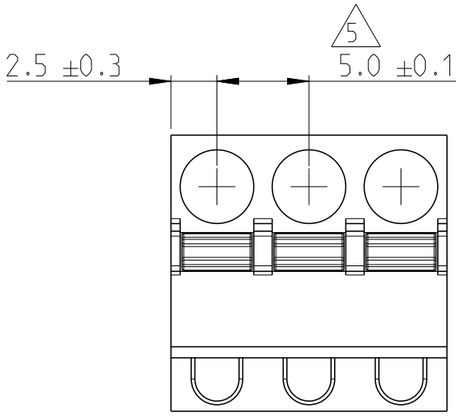

DIM A	NO. OF POS	PART NUMBER
80.0	16	1-2350397-6
75.0	15	1-2350397-5
70.0	14	1-2350397-4
65.0	13	1-2350397-3
60.0	12	1-2350397-2
55.0	11	1-2350397-1
50.0	10	1-2350397-0
45.0	9	2350397-9
40.0	8	2350397-8
35.0	7	2350397-7
30.0	6	2350397-6
25.0	5	2350397-5
20.0	4	2350397-4
15.0	3	2350397-3
10.0	2	2350397-2

THIS DRAWING IS A CONTROLLED DOCUMENT.

DIMENSIONS: mm

TOLERANCES UNLESS OTHERWISE SPECIFIED:
0 PLC ±-
1 PLC ±-
2 PLC ±-
3 PLC ±-
4 PLC ±-
ANGLES ±-

MATERIAL: SEE NOTES -

FINISH: SEE NOTES -

DWN RAGHAVENDRA.K 08APR2019
CHK KARTHIK.JK 01JUL2019
APVD PRASHANH.S 02JUL2019
PRODUCT SPEC -
APPLICATION SPEC -
WEIGHT -

CUSTOMER DRAWING

TE Connectivity

NAME: SPRING FEMALE PLG, GREEN 5.00mm PITCH -

SIZE	CAGE CODE	DRAWING NO	RESTRICTED TO
A3	00779	C-2350397	-

SCALE 3:1 | SHEET 1 OF 1 | REV A

1470-19 (3/13)