THIS DRAWING IS UNPUBLISHED. RELEASED FOR PUBLICATION -.- .
© COPYRIGHT - BY TYCO ELECTRONICS CORPORATION. ALL RIGHTS RESERVED.

LOC	DIST
AA	00

REVISIONS

P	LTR	DESCRIPTION	DATE	DWN	APVD
	C1	ECR-08-013486	28MAY2008	DZ	SY

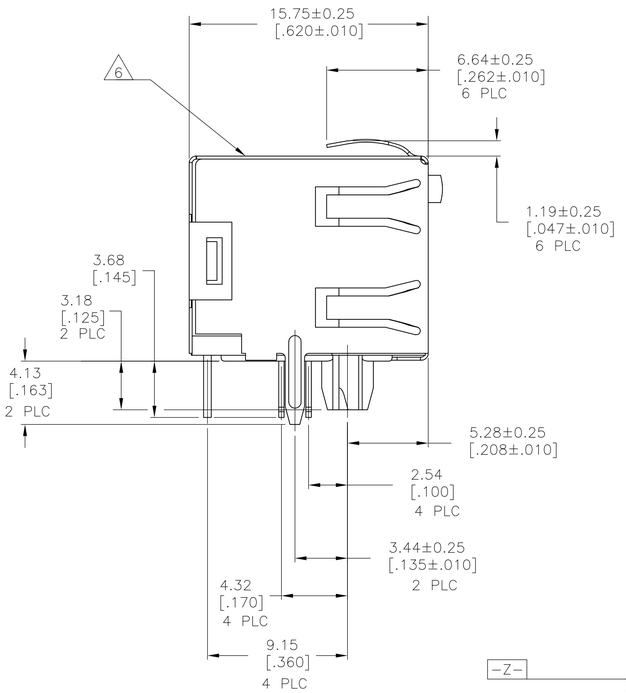

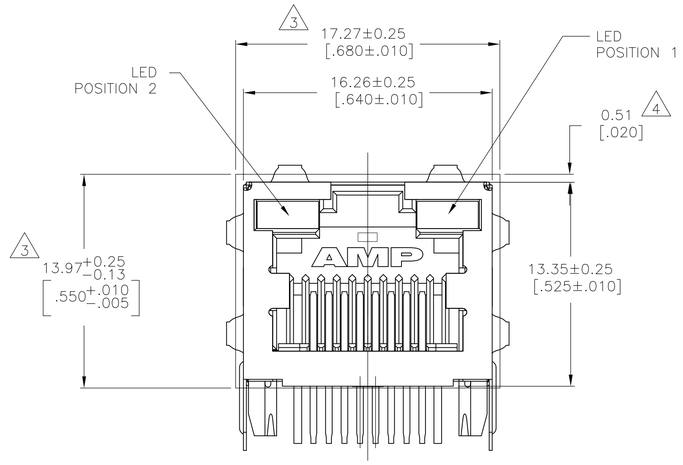

1. MATERIAL: HOUSING – HIGH TEMPERATURE THERMOPLASTIC, BLACK, UL94V-0.
TERMINALS – 0.36[.014] THICK PHOS BRONZE PLATED WITH 3.81µm[.000150] MINIMUM THICK MATTE TIN IN SOLDER AREA. 1.27µm [.000050] MINIMUM GOLD IN LOCALIZED PLATE AREA. ENTIRE TERMINAL PLATED WITH 1.27µm [.000050] MINIMUM THICK NICKEL.
SHIELD – 0.196[.0077] THICK COPPER ZINC ALLOY PREPLATED WITH 1.27µm[.000050] MINIMUM SATIN NICKEL WITH 2.03µm[.000080] MINIMUM TIN POST DIPPED ON PCB GROUND TABS.
LIGHT EMITTING DIODE (LED) – DIFFUSED EPOXY LENS, 0.51 x 0.51[.020 x .020] CARBON STEEL WIREFRAME LEADS – 8.89µm[.000350] THICK Sn/Cu OVER 2.03µm[.000080] THICK Ag OVER 1.02µm[.000040] THICK Cu OVER 3.56µm[.000140] THICK Ni OVER 1.02µm[.000040] THICK Cu UNDERPLATE

2. JACK CAVITY CONFORMS TO FCC RULES AND REGULATIIONS PART 68, SUBPART F.

3. SUGGESTED PANEL OPENING DIMENSIONS.

4. SUGGESTED CLEARANCE BETWEEN TOP OF CONNECTOR AND TOP PANEL OPENING.

5. THIS MODULAR JACK WITH INTEGRATED LED IS NOT IR REFLOW SOLDERING PROCESS COMPATIBLE.

6. MANUFACTURONG DATE CODE:
LOCATED APPROX. AS SHOWN.
FIRST 2 DIGITS = LAST 2 DIGITS OF YEAR.
NEXT 2 DIGITS = MANUFACTURING WORK WEEK.
LAST DIGIT = DAY OF WEEK WITH SUNDAY = 1.

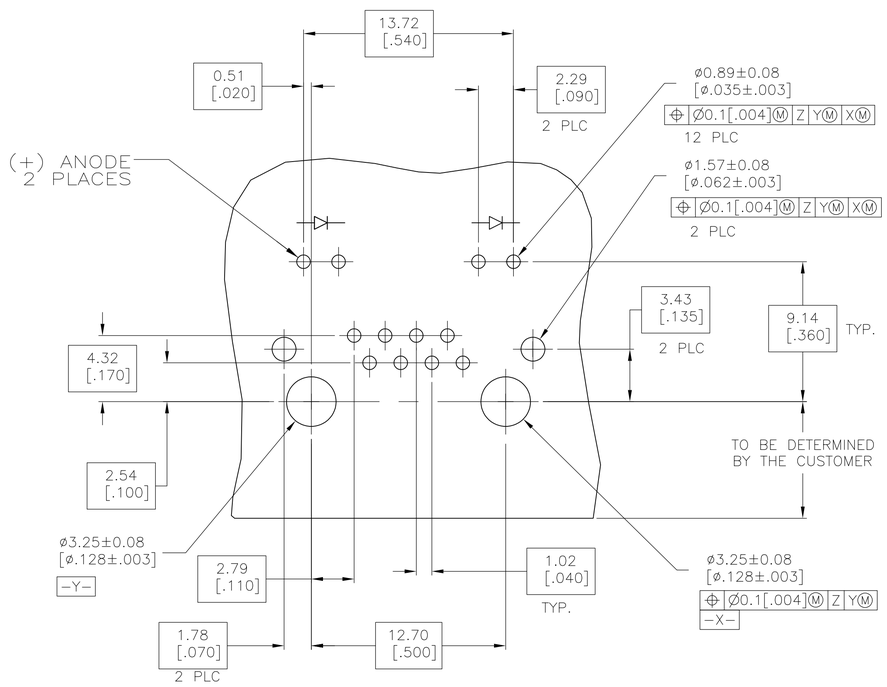

SUGGESTED PRINTED CIRCUIT BOARD LAYOUT
(COMPONENT SIDE)

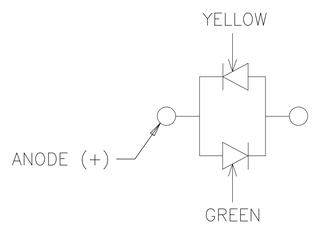

LED CURRENT DIAGRAM
1888566-1

INDICATOR COLOR		PART NUMBER
YELLOW	GREEN	1888566-2
YELLOW/GREEN	YELLOW/GREEN	1888566-1
POSITION 2	POSITION 1	

THIS DRAWING IS A CONTROLLED DOCUMENT.

DIMENSIONS: mm [INCHES]

TOLERANCES UNLESS OTHERWISE SPECIFIED:
0 PLC ± -
1 PLC ± -
2 PLC ± 0.25[.01]
3 PLC ± 0.13[.005]
4 PLC ± -
ANGLES ± -

MATERIAL: SEE NOTE 1
FINISH: SEE NOTE 1

DWN 20JUNE2006 R.GRZYBOWSKI/L.A.MAYER
CHK 20JUNE2006 J.WESTMAN
APVD 20JUNE2006 S.FLICKINGER
PRODUCT SPEC 108-1163-4
APPLICATION SPEC 114-2154
WEIGHT -

Tyco Electronics
Tyco Electronics Corporation
Harrisburg, Pa 17105-3608

NAME: INVERTED MODULAR JACK ASSEMBLY, 1X1, SHIELDED, PANEL GROUND, LED
-

SIZE	CAGE CODE	DRAWING NO	RESTRICTED TO
A1	00779	C-1888566	-

CUSTOMER DRAWING | SCALE 4:1 | SHEET 1 OF 1 | REV C1