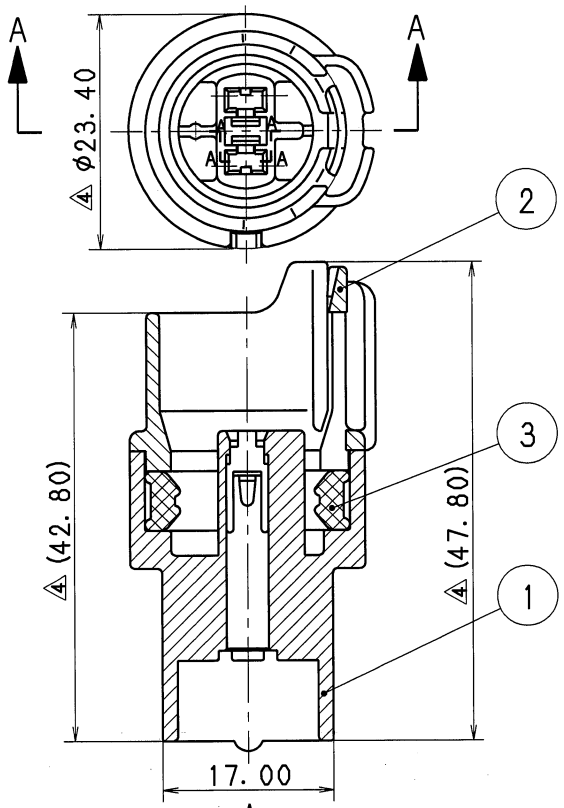

SEC. A-A

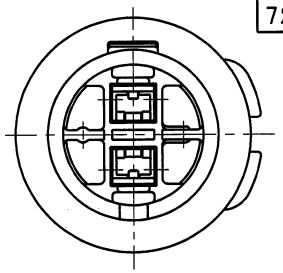

VIEW C

TABLE 1

YAZAKI SUB ASSEMBLY PART NO.	NO.	YAZAKI PART NO.	MATERIAL	COLOR	QTY.
7219-3320 ETC.	①	SEE TABLE 2	PBT	SEE TABLE 2	1
	②	SEE TABLE 2	PBT	SEE TABLE 2	1
	③	7137-1230	SILICONE RUBBER	RED IRON	1

TABLE 2

	YAZAKI SUB ASSEMBLY PART NO.	YAZAKI HOUSING PART NO.	YAZAKI LOCK PART NO.	COLOR
	7219-3320	7119-3320	7157-8673	NATURAL
2	7219-3320-10	7119-3320-10	7157-8673-10	DARK GRAY
3	7219-3320-20	7119-3320-20	7157-8673-20	VIOLET
	7219-3320-30	7119-3320-30	7157-8673-30	BLACK
3	7219-3320-40	7119-3320-40	7157-8673-40	LIGHT GRAY
3	7219-3320-50	7119-3320-50	7157-8673-50	ORANGE
	7219-3320-60	7119-3320-60	7157-8673-60	GREEN
	7219-3320-70	7119-3320-70	7157-8673-70	YELLOW
3	7219-3320-80	7119-3320-80	7157-8673-80	BROWN
	7219-3320-90	7119-3320-90	7157-8673-90	BLUE

4 注記

1. 取扱説明書No. : YPES-15-041

4 NOTE

1. HANDLING MANUAL NO. : YPES-15-041

LET	DATE	REVISION RECORD	NO.	CHKD
4	12.05.10	ADDED GENERAL TOLERANCE ETC.	C12-Z447	J. B
3	97.06.17	CAD DRAWN & ADDED PART NO.	C97-M139	M. T
2	88.04.21	色品番追加	8MC-0450	山本
1	86.04.28	形状変更及び公差変更	C86-5484	近藤
	82.11.01	NEW	C82-3023	山田

4 GENERAL TOLERANCE

	10MAX	50MAX	100MAX	250MAX	2500VR	ANGLE	ECCENT
A	±0.15	±0.2	±0.3	±0.5	±0.75	±30′	0.1
B	±0.2	±0.3	±0.55	±0.95	±1.4	±30′	0.1
C	±0.3	±0.5	±0.8	±1.4	±2	±30′	0.15

SPECIFIED

MASS g

ISSUE MARK

CUSTOMER

CUSTOMER PART NO. | CUSTOMER DWG NO.

OFFICE | TRIAL PART NO.

VENDOR

VENDOR NO.

DWG TYPE	DWG SOURCE	DWG DATE	UNIT	SCL	ANGLE
R	NEW	80.06.10	mm	3 2:1	3

APPROVED	CHECKED	CHECKED	DESIGN	DRAWN
M. FUKUDA	Y. SASAKI	———	T. KATO	J. BINALLA
12.05.10	12.05.10	———		12.05.10

MATL. SPEC. SEE TABLE 1 | TREAT. & FIN.

NAME 4 B. S. HOUSING 2P SUB ASSEMBLY FEMALE

PART NO. / CH. CODE 7219-3320 ETC.

DWG NO. 7219-3320:R | SET DWG NO.

YAZAKI CORPORATION