THIS DRAWING IS UNPUBLISHED. RELEASED FOR PUBLICATION -,- .
© COPYRIGHT - BY TYCO ELECTRONICS CORPORATION. ALL RIGHTS RESERVED.

| LOC | DIST |
|---|---|
| AF | 50 |

REVISIONS

| P | LTR | DESCRIPTION | DATE | DWN | APVD |
|---|---|---|---|---|---|
| | A1 | REVISED PER ECR-10-018126 | 18SEP10 | HMR | PD |

1 CONTINUOUS STRIP ON REELS

2 TO BE USED WITH SPECIAL 1/16" [.062] DIA GALVANIZED STEEL CABLE.

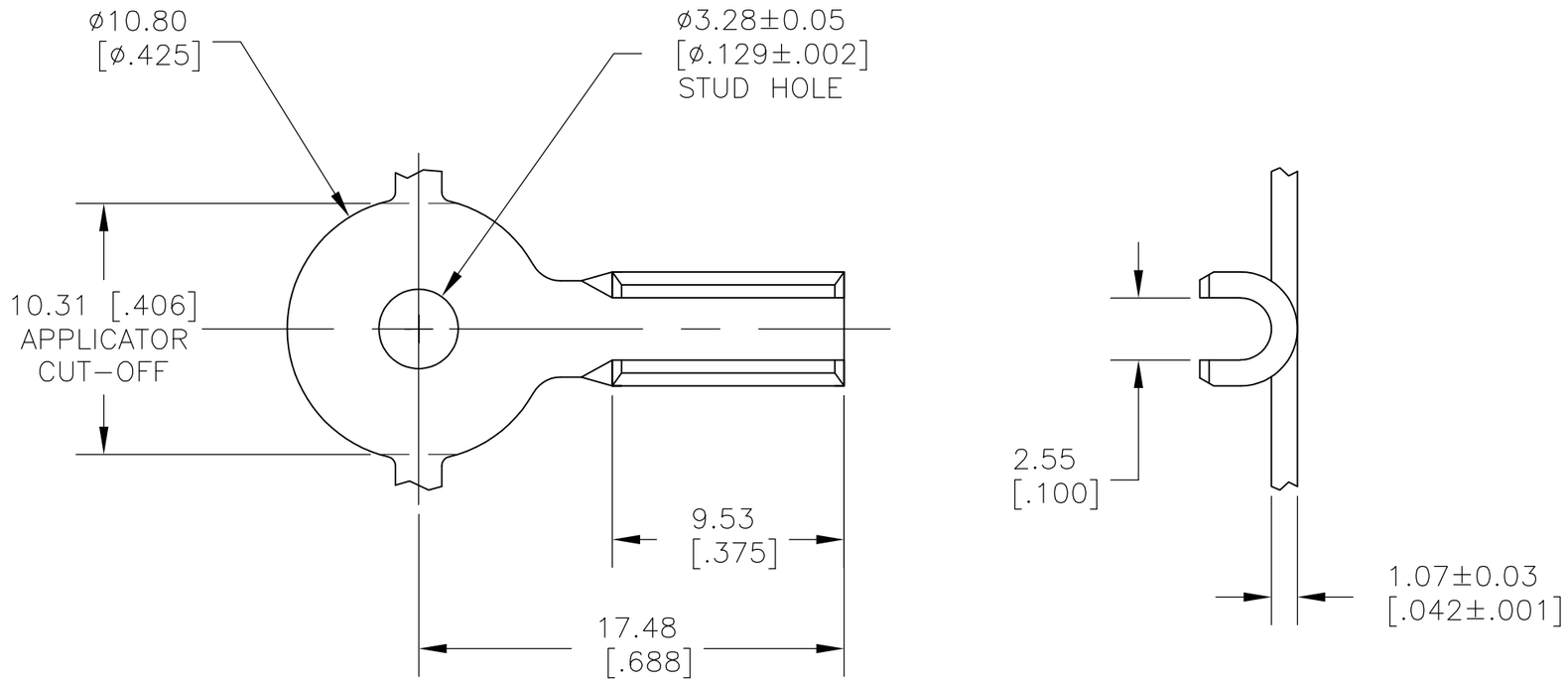


1742775-1

PART NO

THIS DRAWING IS A CONTROLLED DOCUMENT.

DIMENSIONS: MM [ INCHES ]

TOLERANCES UNLESS OTHERWISE SPECIFIED:

| | |
|---|---|
| 0 PLC | ± - |
| 1 PLC | ± - |
| 2 PLC | ± 0.25 [.010] |
| 3 PLC | ± - |
| 4 PLC | ± - |
| ANGLES | ± 5° |

MATERIAL: CR STEEL

FINISH: NICKEL PLATE

| | | |
|---|---|---|
| DWN | jr ruth | 23JAN09 |
| CHK | DON DECKER | 23JAN09 |
| APVD | DON DECKER | 23JAN09 |

PRODUCT SPEC: —

APPLICATION SPEC: —

WEIGHT: —

CUSTOMER DRAWING

Tyco Electronics

Tyco Electronics Corporation
Harrisburg, PA 17105-3608

NAME: RING, CABLE FITTING

| SIZE | CAGE CODE | DRAWING NO | RESTRICTED TO |
|---|---|---|---|
| A3 | 00779 | C-1742775 | — |

| SCALE | SHEET | REV |
|---|---|---|
| 4:1 | 1 OF 1 | A1 |