TABLE 1

SUB ASSEMBLY PART NO. AND CH. CODE	NO.	PART NO. AND CH. CODE	PART NAME	MATERIAL	COLOR	QTY.
△2 SEE TABLE 2	①	△2 SEE TABLE 2	025 24P+060 4P HOUSING MALE	PBT	△2 SEE TABLE 2	1
	②	△2 SEE TABLE 2	025 24P+060 4P SPACER MALE	PBT	△2 SEE TABLE 2	1

TABLE 2

SUB ASSEMBLY PART NO. AND CH. CODE	HOUSING PART NO. AND CH. CODE	SPACER PART NO. AND CH. CODE	COLOR
7286-8861, B	7186-8861	7172-0666	NATURAL
△2 7286-8861-90, B	7186-8861-90	7172-0666-90	BLUE

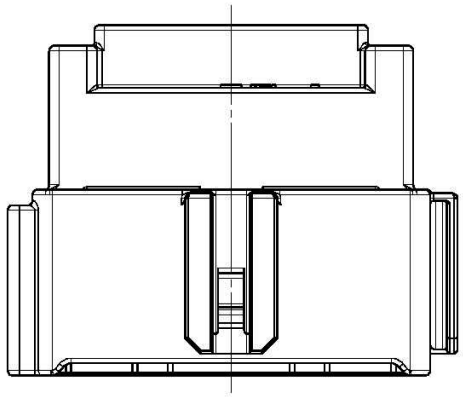

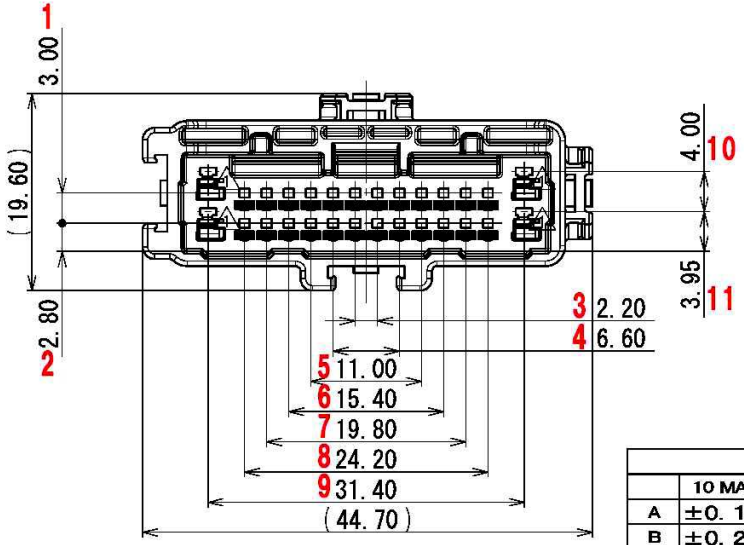

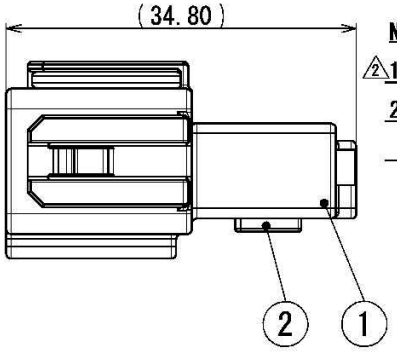

注記

△2 1. かん合相手品番 : 7287-8861 ETC.

2. 適用端子品番 : (025) 7114-4993-02 ETC.

: (060) 7114-7386-02 ETC.

NOTES

△2 1. MATING PART NO. : 7287-8861 ETC.

2. APPLICABLE TERMINAL PART NO. : (025) 7114-4993-02 ETC.

: (060) 7114-7386-02 ETC.

GENERAL TOLERANCE

	10 MAX	50 MAX	100 MAX	250 MAX	250 OVR	R5 MAX	R10 MAX	R20 MAX	R20 OVR	ANGLE	ECCENT
A	±0.15	±0.2	±0.3	±0.5	±0.75	±0.2	±0.3	±0.5	±2.5	±3°	0.1
B	±0.2	±0.3	±0.55	±0.95	±1.4					±3°	0.1
©	±0.3	±0.5	±0.8	±1.4	±2					±3°	0.15

ISSUE MARK

LET	DATE	REVISION RECORD	NO.	CHKD
△3	2012/10/30	CHANGED CH. CODE, B	C12-Z924	J.C
△2	2012/04/20	ADDED PART NO., ETC.	C12-Z410	E.O
△1	2012/01/30	CHANGED FORM, A	C12-Z176	J.B
	2011/11/24	NEW	C11-Z709	J.B

GENERAL TOLERANCE

	10MAX	50MAX	100MAX	250MAX	2500VR	ANGLE	ECCENT
A	±0.15	±0.2	±0.3	±0.5	±0.75	±30'	0.1
B	±0.2	±0.3	±0.55	±0.95	±1.4	±30'	0.1
C	±0.3	±0.5	±0.8	±1.4	±2	±30'	0.15

SPECIFIED

MASS

CUSTOMER

CUSTOMER PART NO. | CUSTOMER DWG NO.

OFFICE | TRIAL PART NO.

VENDOR

VENDOR NO.

DWG TYPE	DWG SOURCE	DWG DATE	UNIT	SCL	ANGLE
R	NEW	2011/11/24	mm	2:1	3

APPROVED	CHECKED	CHECKED	DESIGN	DRAWN
H. KANDA	Y. IWAHORI	———	K. MATSUMURA	J. CANDO
2012/10/30	2012/10/30	———	2011/09/12	2012/10/30

MATL. SPEC. △2 SEE TABLE 1 | TREAT. & FIN.

NAME 025 24P+060 4P HOUSING MALE

SUB ASSEMBLY

PART NO. CH. CODE △2 7286-8861 ETC.

DWG NO. 7286-8861:R | SET DWG NO.

YAZAKI CORPORATION