These drawings and specifications are the property of Microdot Inc., are issued in strict confidence and shall not be divulged, be reproduced or copied, or used as the basis for the manufacture or sale of any article without written permission of Microdot Inc.

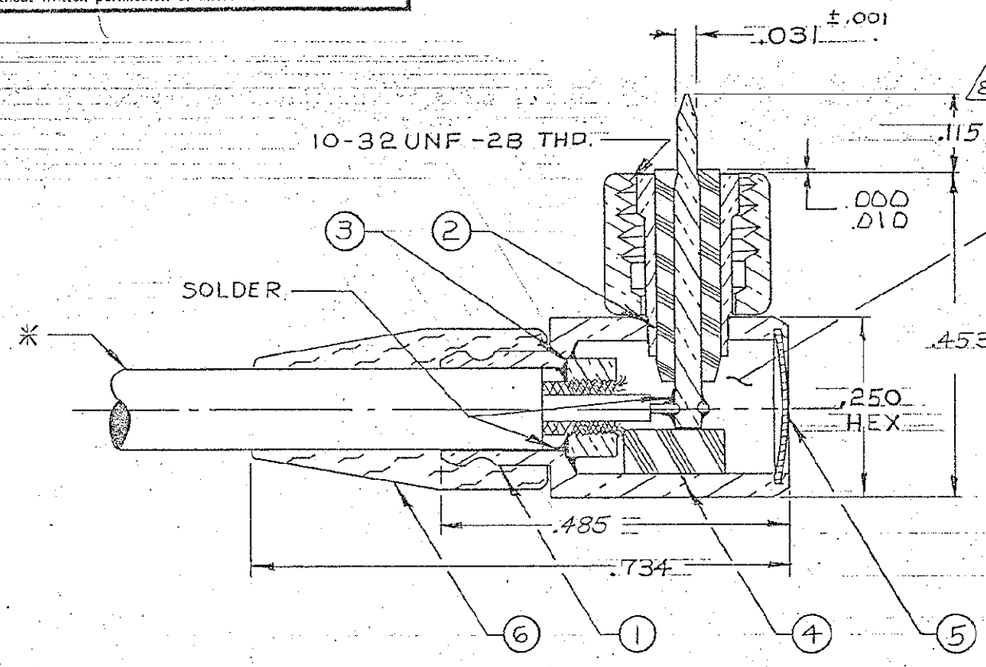


* CABLE ACCEPTANCE DIMS.
JACKET DIA. — — — — — — .112 MAX.
SHIELD DIA. — — — — — — .075 MAX.
CENTER COND. — — — — — — .012 NOM.
(MICRODOT 250-39/2)

| QTY. | PART NO. | NOMENCLATURE | MAT. & SPEC. | FINISH | ITEM |
|---|---|---|---|---|---|
| 1 | 003-0271-0000 | B.R. CAP (BLACK) | SILICONE RUBBER, ZZ-R-765 | | 6 |
| 1 | 003-0098-0001 | SEAL DISC | F.M. BRASS, QQ-B-613 | 6 | 5 |
| 1 | 003-0331-0001 | BACK-UP BUSHING | TEFLON, MIL-M-14077 | | 4 |
| 1 | 003-0039-0001 | RING | F.M. BRASS, QQ-B-626 | 6 | 3 |
| | 003-0050-0001 | BUSHING | TEFLON, MIL-M-14077 | | |
| | 003-0049-0002 | PIN CONTACT | COPPER ALLOY | 7 | |
| 1 | 003-1363-0001 | CONTACT SUB-ASSY | | | 2 |
| | 003-0029-0000 | NUT (.230 D. KNURL) | F.M. BRASS, QQ-B-626 | | |
| | 003-0078-0000 | FERRULE | F.M. BRASS, QQ-B-626 | | |
| | 005-1836-0000 | BLOCK | F.M. BRASS, QQ-B-626 | | |
| 1 | 005-3719-0001 | HOUSING SUB-ASSY. | | 6 | 1 |

8 .115 DIM. TO BE MEASURED TO HOUSING.
7 GOLD PLATE PER MIL-G-45204, TYPE II, CLASS 1.
6 SILVER PLATE .0002-.0004 PER QQ-S-365, TYPE II, GRADE A.
5. INSULATION RESISTANCE — $5.0 \times 10^9$ OHMS MIN.
4. WORKING VOLTAGE — 750 V.R.M.S.
3. ASSY. TOOL #010-0016-0000 REQ'D.
2. FOR ASSY. INSTRUCTIONS SEE BULLETIN #45.
1. THIS CONNECTOR MATES WITH ALL RECEPT. & JACKS IN SERIES S-50 AS LISTED IN MICRODOT CATALOG.

NOTES: UNLESS OTHERWISE SPECIFIED

| ASSEMBLY | NO REQ'D |
|---|---|
| NEXT ASSEMBLIES | |

| LET | ECO | REVISION DESCRIPTION | BY | CK | DATE | APP |
|---|---|---|---|---|---|---|
| J | 39805 | UPDATE REV. LETTER. | TL | | 1/13/00 | BS |
| H | 36837 | ITEM 6, WAS 003-0041-0000 | BD | | 3/30/97 | BS |
| G | 36291 | REV. LETTER UP-DATED | | | 4/9/93 | |
| F | 11825 | .115 .005 WAS .115 .010 ADD .000-.010 Note 8 | | | 7/17/90 | |
| E | 11494 | DIM .485 WAS .328 | KM | | 3/23/62 | |
| D | 6736 | REVISED & REDRAWN | J.N. | | 9/26/61 | |

STANDARD TOLERANCES UNLESS-OTHERWISE SPECIFIED
DEC. ± .010
FRAC. ±
ANGLES ±
ECCENTRICITY
MAX. T.I.R.
HOLE DIA. ±
SURFACE ROUGHNESS
✓ MICRO INCHES
THREADS TO MIL-S-7742
COMMERCIAL TOLERANCES APPLY TO STOCK DIMENSIONS

MICRODOT INC.
SOUTH PASADENA, CALIF.

SURFACE TREATMENT: NOTED
MATERIAL: NOTED
APP: G.G.
APP:
CHECKED BY: I.K.J.
DRAWN BY: M.F.M. (J.N.)
PROJ CODE: 934
SCALE: 5X
WT:
DATE: 6-22-60

ANGLE PLUG

CODE: C.D.M.
DRAWING NUMBER: 052-0337-0001 J

DIETERICH-POST CLEARPRINT 1000H