④ NO.	YAZAKI PART NO. AND CH. CODE	C	D	E	F	APPLICABLE WIRE	④ MASS
1	7114-3250	9.60	6.60	②(9.50)	(7.30)	③ AV 5~8, AVS 5	④(4.0 g)
2	7114-3251	7.20	4.80	②(8.70)	②(5.10)	③ AV 3, AVS 3, AVS 3f	④(3.6 g)

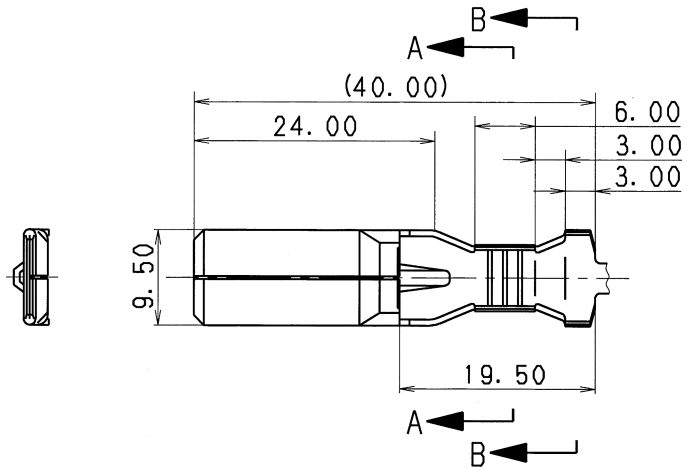

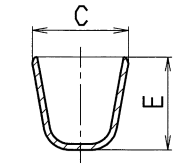

SEC. B-B

③ 注記

1. かん合メスターミナル品番 : 7116-3250 ETC.
④ 2. かん合コネクタ品番 : 7122-4110 ETC.
: 7122-4310-30 ETC.

③ NOTES

1. MATING FEMALE TERMINAL PART NO. : 7116-3250 ETC.
④ 2. MATING CONNECTOR PART NO. : 7122-4110 ETC.
: 7122-4310-30 ETC.

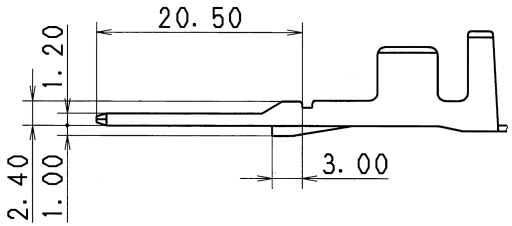

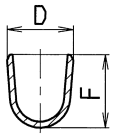

SEC. A-A

LET	DATE	REVISION RECORD	NO.	CHKD
④	2018/09/07	DELETED PART NO., ETC.	C18-Z097	G. M
③	2016/08/04	CHANGED APPLICABLE WIRE SIZE, ETC.	C16-Z607	A. Q
②	2002/05/30	CHANGED TOLERANCE ETC.	C02-X619	K. U
①	1990/01/29	RENEW	C90-L039	H. Y

GENERAL TOLERANCE

	10MAX	50MAX	100MAX	250MAX	2500VR	ANGLE	ECCENT
A	±0.15	±0.2	±0.3	±0.5	±0.75	±30′	0.1
B	±0.2	±0.3	±0.55	±0.95	±1.4	±30′	0.1
Ⓒ	±0.3	±0.5	±0.8	±1.4	±2	±30′	0.15

SPECIFIED

MASS ④SEE TABLE

ISSUE MARK

CUSTOMER ①

CUSTOMER PART NO. | CUSTOMER DWG NO.

OFFICE ① | TRIAL PART NO.

VENDOR

VENDOR NO.

DWG TYPE	DWG SOURCE	DWG DATE	UNIT	SCL	ANGLE
R	NEW	1983/03/10	mm	2:1	3

APPROVED	CHECKED	CHECKED	DESIGN	DRAWN
M. NAKAMURA			INABA	G. MANDERICO
2018/09/07			1983/03/11	2018/09/07

MATL. SPEC. ③COPPER ALLOY (t=0.6)

TREAT. & FIN. ③ TIN PLATING

NAME ③L TYPE MALE TERMINAL

PART NO. CH. CODE 7114-3250 ETC.

DWG NO. ① 7114-3250:R

SET DWG NO.

YAZAKI CORPORATION