GENERAL TOLERANCE											
	10 MAX	50 MAX	100 MAX	250 MAX	250 OVR	R5 MAX	R10 MAX	R20 MAX	R20 OVR	ANGLE	ECCENT
A	±0.15	±0.2	±0.3	±0.5	±0.75	±0.2	±0.3	±0.5	±2.5	±3°	0.1
B	±0.2	±0.3	±0.55	±0.95	±1.4					±3°	0.1
Ⓒ	±0.3	±0.5	±0.8	±1.4	±2					±3°	0.15

△3 ASSEMBLY PART NO. AND CH. CODE	NO.	PART NO. AND CH. CODE	PART NAME	MATERIAL	COLOR	QTY.
△3 7327-3115, A	①	7157-8059	△3 HIGH CURRENT FUSE LINKS (大電流ヒューズ) COVER 60A	PES	———	1
	②	7122-3622-70	△3 HIGH CURRENT FUSE LINKS (大電流ヒューズ) B_1-TYPE HOUSING 60A	PA6T-G	YELLOW	1
	③	7227-6051	△3 HIGH CURRENT FUSE LINKS (大電流ヒューズ) B_1-TYPE FUSE ELEMENT SUB ASSEMBLY 60A	△3 ———	———	1

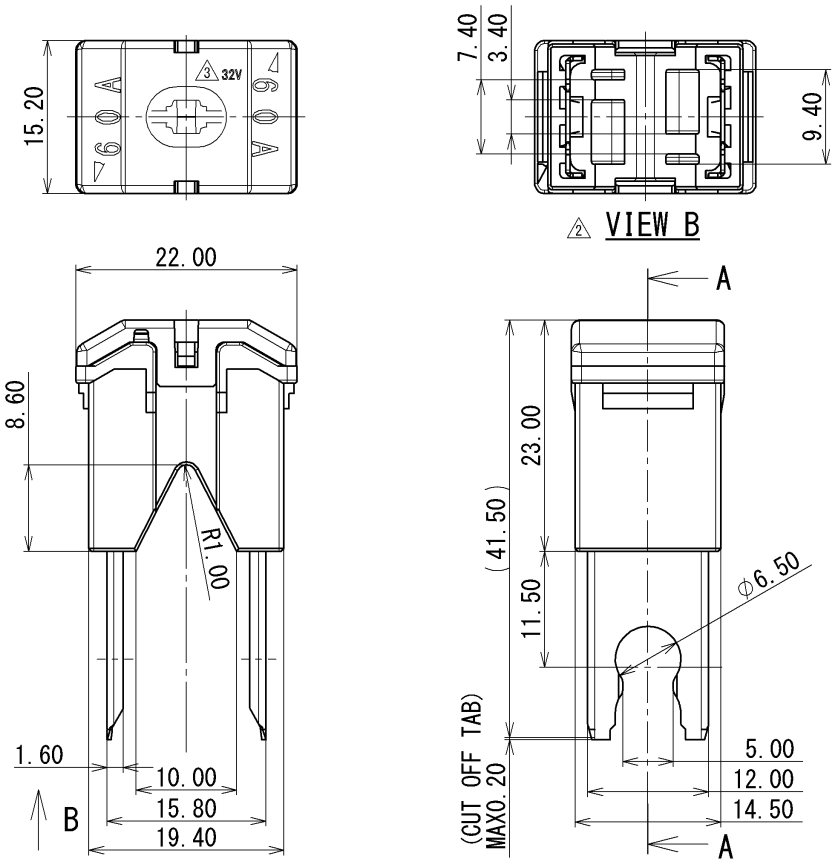

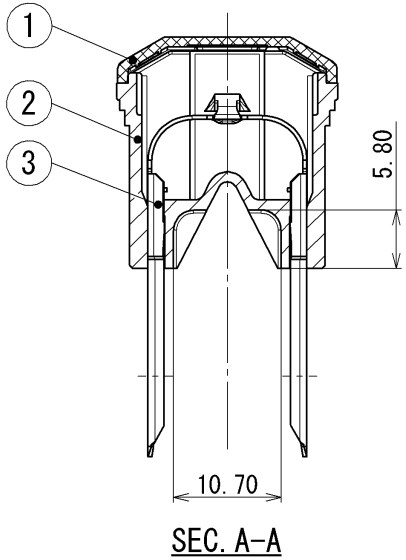

△2 注記

1. 使用ボルト：M6

△2 NOTE

1. APPLICABLE BOLT:M6

LET	DATE	REVISION RECORD	NO.	CHKD
△3	13.05.16	ADDITION OF RATED VOLTAGE ETC., A	C13-Z189	E.M
△2	10.09.27	ADDED NOTES & DELETED PART NO. ETC	C10-Y129	H.T
△1	92.05.13	CH. TABLE & NOTES	C92-6474	T.S
	90.03.27	NEW	C90-L329	M.T

ISSUE MARK

GENERAL TOLERANCE							
	10MAX	50MAX	100MAX	250MAX	2500VR	ANGLE	ECCENT
A	±0.15	±0.2	±0.3	±0.5	±0.75	±30'	0.1
B	±0.2	±0.3	±0.55	±0.95	±1.4	±30'	0.1
C	±0.3	±0.5	±0.8	±1.4	±2	±30'	0.15

SPECIFIED

MASS

CUSTOMER					
CUSTOMER PART NO.		CUSTOMER DWG NO.			
OFFICE		TRIAL PART NO.			
VENDOR					
VENDOR NO.					
DWG TYPE	DWG SOURCE	DWG DATE	UNIT	SCL	ANGLE
R	NEW	90.03.27	mm	2:1	3
APPROVED	CHECKED	CHECKED	DESIGN	DRAWN	
S. ONODA	———	———	M. TOTSUKA	E. MESA	
13.05.16	———	———	90.02.08	13.05.16	

MATL. SPEC. SEE TABLE

TREAT. & FIN.

NAME HIGH CURRENT FUSE LINKS

(大電流ヒューズ) B_1-TYPE 60A

PART NO. CH. CODE △3 7327-3115, A

7327-3115:R

SET DWG NO.

YAZAKI CORPORATION